This document was generated on 04/19/2010

PLEASE CHECK WWW.MOLEX.COM FOR LATEST PART INFORMATION

Part Number: 5033980891

Status: Active

Description: 1.10mm (.043") Pitch microSD Memory Card Connector, Normal Mount SMT, Push-Push Type, 1.28mm (.050") Height

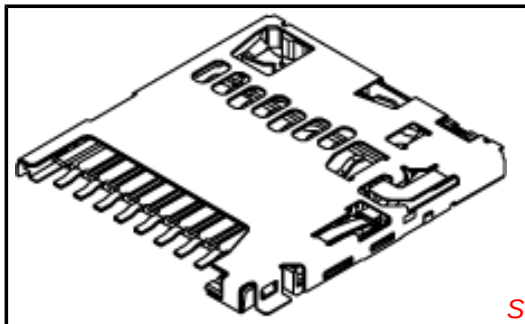

Series image - Reference only

Documents:

3D Model
Drawing (PDF)
Product Specification PS-503398-001 (PDF)
RoHS Certificate of Compliance (PDF)

General

Product Family	Memory Card Sockets
Series	503398
Button Type	Push-Push
Component Type	Header & Ejector (Host)
Product Name	microSD Card
Type	N/A

Physical

Card Detection Switch	Yes
Circuits (Loaded)	8
Color - Resin	Black
Durability (mating cycles max)	10,000
Ejector Button Side	No Ejector Button Present
Entry Angle	90° Angle
Keying to Mating Part	Yes
Material - Metal	Phosphor Bronze, Stainless Steel
Material - Plating Mating	Gold
Material - Plating Termination	Gold, Tin
PCB Locator	No
PCB Mounting Side	Normal
PCB Retention	Yes
Packaging Type	Embossed Tape on Reel
Pitch - Mating Interface (in)	0.043 In
Pitch - Mating Interface (mm)	1.10 mm
Ports	1
Temperature Range - Operating	-25°C to +85°C
Termination Interface: Style	Surface Mount

Electrical

Current - Maximum per Contact	0.5A
Shielded	Yes
Voltage - Maximum	10V AC (RMS)/DC

Material Info

Reference - Drawing Numbers

Product Specification	PS-503398-001, RPS-503398-001
Sales Drawing	SD-503398-001, SD-503398-002

EU RoHS
ELV and RoHS Compliant
REACH SVHC
Not Reviewed
Halogen-Free Status
Not Reviewed

China RoHS

Need more information on product environmental compliance?

Email productcompliance@molex.com
For a multiple part number RoHS Certificate of Compliance, click here

Please visit the Contact Us section for any non-product compliance questions.

Search Parts in this Series
503398Series

Use With
microSD Card

This document was generated on 04/19/2010

PLEASE CHECK WWW.MOLEX.COM FOR LATEST PART INFORMATION

CONFIDENTIAL

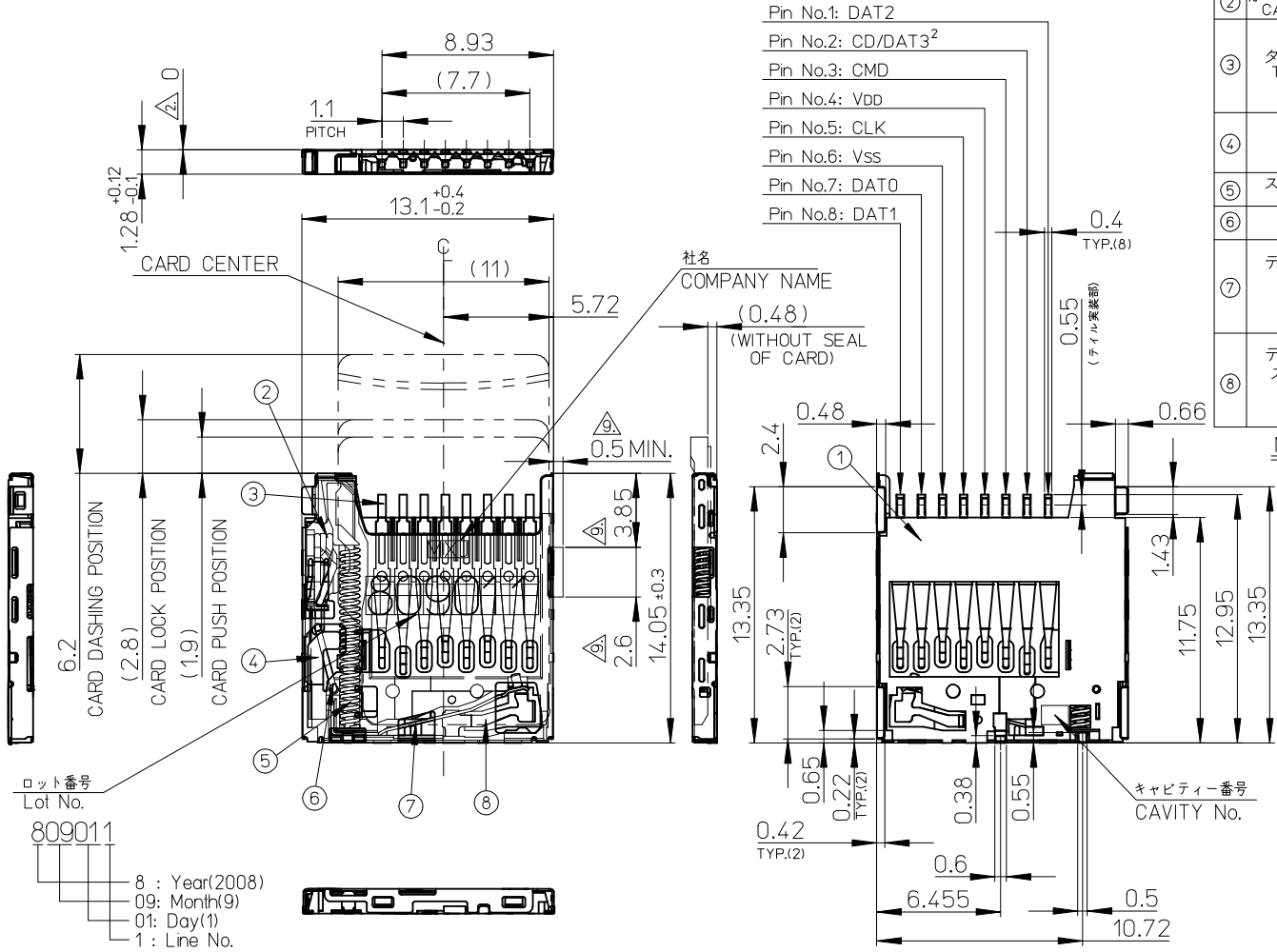

番号 NO.	名称 NAME	材料 MATERIAL	仕上げ(めっき) FINISHES (PLATING)
①	ハウジング HOUSING	液晶ポリマー(LCP)、ガラス充填、UL94 V-0、黒 LIQUID CRYSTAL POLYMER (LCP), GLASS FILLED, UL94 V-0, BLACK	
②	カムスライダー CAM SLIDER	液晶ポリマー(LCP)、ガラス充填、UL94 V-0、黒 LIQUID CRYSTAL POLYMER (LCP), GLASS FILLED, UL94 V-0, BLACK	
③	ターミナル TERMINAL	燐青銅 PHOSPOHR BRONZE	接触部:金めっき (0.5μm MIN.) テール部:錫めっき (2.0μm MIN.) 下地:ニッケルめっき (1.0μm MIN.) CONTACT AREA:GOLD PLATING (0.5 MICROMETER MINIMUM.) SOLDER TAIL AREA:TIN PLATING (2.0 MICROMETER MINIMUM.) UNDERPLATE:NICKEL OVERALL (1.0 MICROMETER MINIMUM.)
④	シェル SHELL	ステンレス鋼 STAINLESS STEEL	ステンレス鋼 基板実装部:金めっき 下地:ニッケルめっき NAIL AREA:GOLD PLATING UNDERPLATE:NICKEL OVERALL
⑤	スプリング SPRING	ピアノ線 SWP	全面:ニッケルめっき NICKEL OVERALL
⑥	ピン PIN	ステンレス鋼 STAINLESS STEEL	
⑦	ディテクトレバー DETECT LEVER	燐青銅 PHOSPOHR BRONZE	接触部:金めっき (0.2μm MIN.) 基板実装部:金めっき 下地:ニッケルめっき CONTACT AREA:GOLD PLATING (0.2 MICROMETER MINIMUM.) NAIL AREA:GOLD PLATING UNDERPLATE:NICKEL OVERALL
⑧	ディテクトスイッチ DETECT SWITCH	燐青銅 PHOSPOHR BRONZE	接触部:金めっき (0.2μm MIN.) 基板実装部:金めっき 下地:ニッケルめっき CONTACT AREA:GOLD PLATING (0.2 MICROMETER MINIMUM.) NAIL AREA:GOLD PLATING UNDERPLATE:NICKEL OVERALL

NOTES

1. ターミナル及びネイルの平坦度は 0.1 MAX.
(測定用定板面を基準)
TERMINAL AND NAIL COPLANARITY TO BE 0.1 MAX.(FROM GAUGE PLANE)
2. スタンドオフ寸法 STAND OFF
3. パターン禁止エリア PATTERN PROHIBITION AREA
4. カード検知スイッチ DETECT SWITCH

カード挿入時 CARD INSERTING POSITION	クローズ CLOSE
カード未挿入時 NO CARD	オープン OPEN

5. 肉抜き位置は任意とする。CAVITY IS TO BE OPTIONAL.
6. ロット印字は任意とする。LOT NUMBERING IS TO BE OPTIONAL.
7. GND 推奨パターン GND RECOMMENDED PATTERN.
8. ELV 及び RoHS 適合品 ELV AND RoHS COMPLIANT.
9. カード裏挿し誤挿入時、カード突出エリア
(他の部品の設置、非推奨範囲)
WHEN A CARD IS MISS-MATED IN THE REVERSE ORIENTATION, PART OF THE CARD PROTRUDES FROM THE SHELL DUE TO THE CARD-MISS MATING PREVENTION FEATURE. THEREFORE, NO COMPONENTS ARE ALLOWED TO BE PLACED IN THIS AREA.

503398-0891	8
EMBOSSED PACKAGE	極数 CIRCUITS
オーダー番号 ORDER NO.	
CONNECTOR SERIES No. 503398-0811	

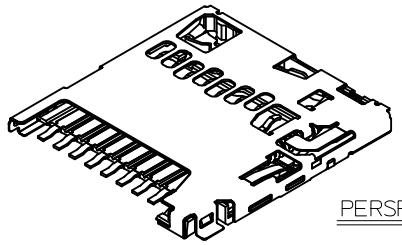

PERSPECTIVE VIEW

PROPOSED
EC NO: J2010-0[illegible]
DRWN:YMATSUMOTO 2009/09/17
CH'KD:MTOMITA 2009/09/17
APPR:NUKITA 2009/09/17
DESCRIPTION
REV 0

GENERAL TOLERANCES (UNLESS SPECIFIED)

10 UNDER	±0.2
10 OVER 30 UNDER	±0.25
30 OVER	±0.3
ANGULAR	±1 °

DRAFT WHERE APPLICABLE MUST REMAIN WITHIN DIMENSIONS

DIMENSION STYLE	MM ONLY
SCALE	4:1
DESIGN UNITS	METRIC
	THIRD ANGLE PROJECTION
DRAWN BY / DATE	YMATSUMOTO 2009/09/09
CHECKED BY / DATE	MTOMITA 2009/09/09
APPROVED BY / DATE	NUKITA 2009/09/09
TITLE	MICRO SD CONN. PUSH/PUSH & NORMAL SUPER-SMALL TYPE
	MOLEX INCORPORATED
MATERIAL NO.	SEE CHART
DOCUMENT NO.	SD-503398-001
SHEET NO.	1 OF 2
SIZE	A3

THIS DRAWING CONTAINS INFORMATION THAT IS PROPRIETARY TO MOLEX INCORPORATED AND SHOULD NOT BE USED WITHOUT WRITTEN PERMISSION

CONFIDENTIAL

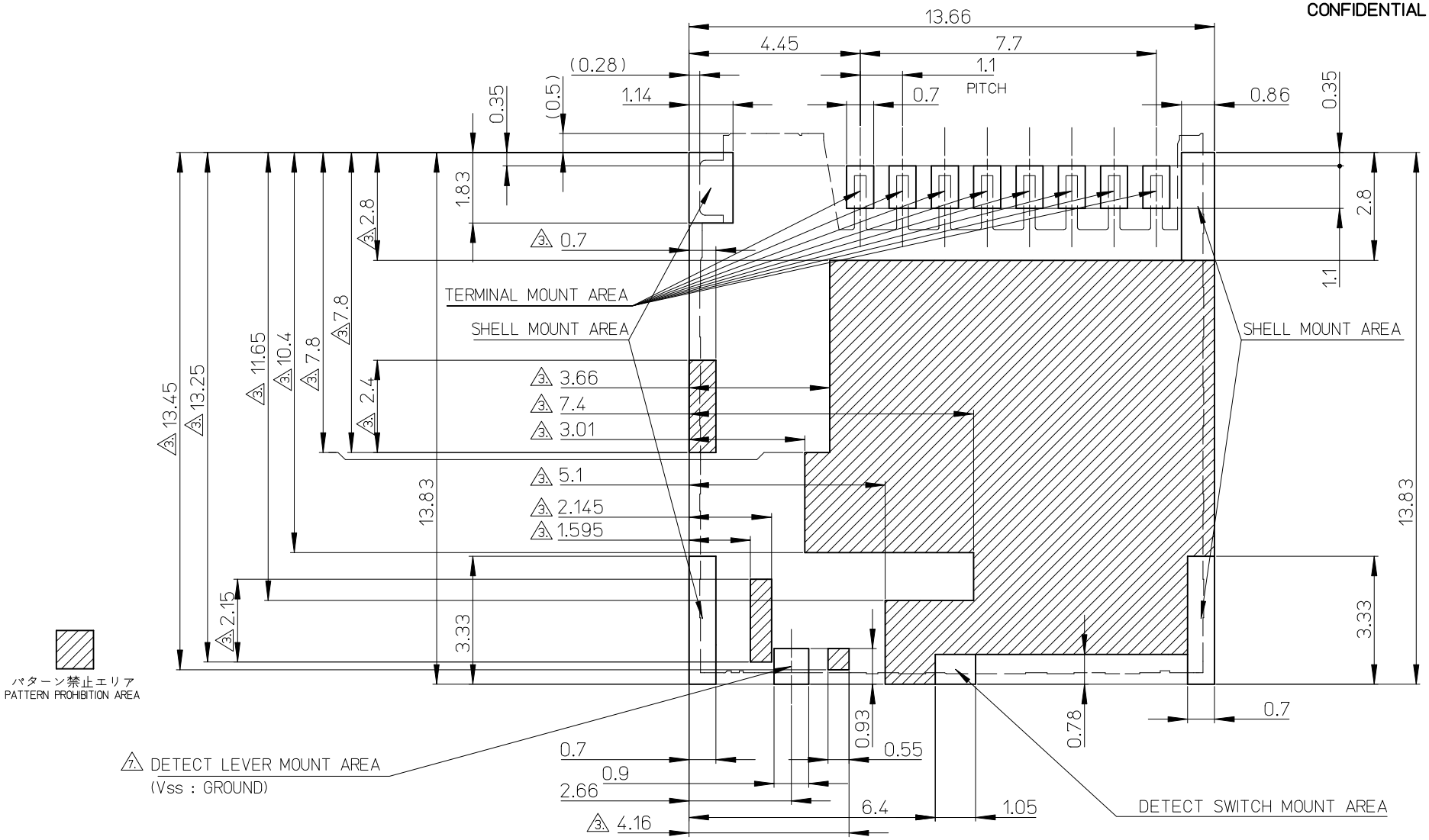

RECOMMENDED
PCB PATTERN LAYOUT

(GENERAL TOLERANCE : ±0.05)

PROPOSED	EC NO: J2010-05-39	DRWN:YMATSUMOTO	2009/09/17
		CH'KD:MTOMITA	2009/09/17
		APPR:NUKITA	2009/09/17
REV	DESCRIPTION		
0			

GENERAL TOLERANCES (UNLESS SPECIFIED)

10 UNDER	±0.2
10 OVER 30 UNDER	±0.25
30 OVER	±0.3
ANGULAR	±1 °

DRAFT WHERE APPLICABLE MUST REMAIN WITHIN DIMENSIONS

DIMENSION STYLE: MM ONLY	SCALE: 4:1	DESIGN UNITS: METRIC	THIRD ANGLE PROJECTION
DRAWN BY: YMATSUMOTO	DATE: 2009/09/09	TITLE: MICRO SD CONN. PUSH/PUSH & NORMAL SUPER-SMALL TYPE	
CHECKED BY: MTOMITA	DATE: 2009/09/09		
APPROVED BY: NUKITA	DATE: 2009/09/09	molex MOLEX INCORPORATED	
MATERIAL NO.: SEE CHART		DOCUMENT NO.: SD-503398-001	SHEET NO.: 2 OF 2
SIZE: A3			

THIS DRAWING CONTAINS INFORMATION THAT IS PROPRIETARY TO MOLEX INCORPORATED AND SHOULD NOT BE USED WITHOUT WRITTEN PERMISSION

引き出し方向
PULL OUT DIRECTION

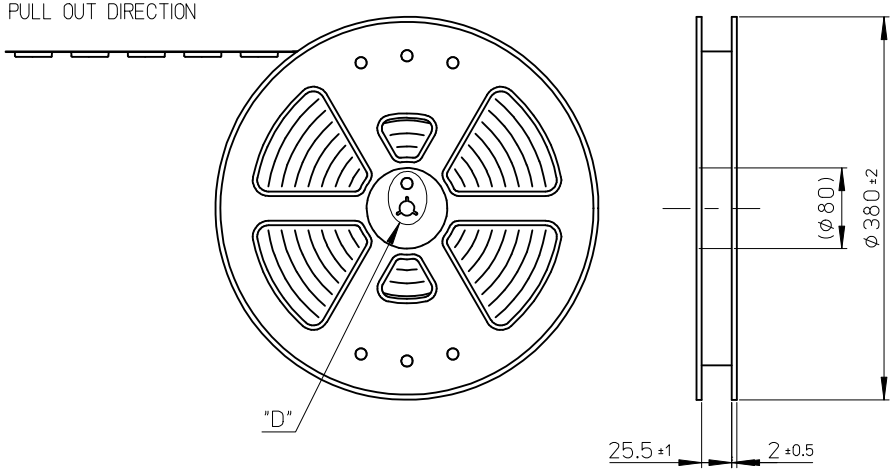

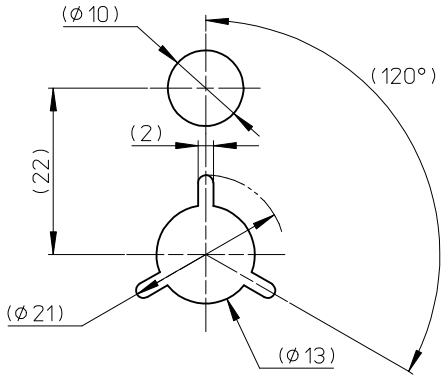

DETAIL "D"

NOTES

1. 製品詳細寸法については、SD 図面を参照下さい。
   RE DETAILED DIMENSION, SEE SALES DRAWING.
2. 梱包数量：2400個／リール
   NUMBER OF CONNECTORS : 2400 PCS/REEL.
3. リードテープ長さ LEAD TAPE LENGTH.

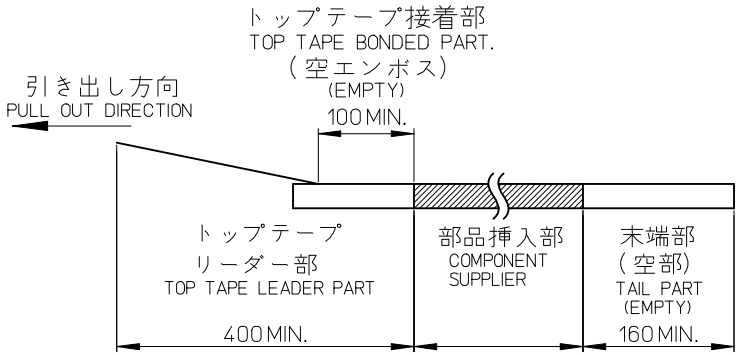

4. トップテープの剥離強度： JIS C0806-3に準拠(剥離方向は下図参照)
   尚、本規格値は出荷時に適用。(但し、輸送時に剥離が発生しないこと。)
   PEELING OFF FORCE OF TOP TAPE : BASED UPON JIS C0806-3
   (PEELING DIRECTION AS SHOWN IN FOLLOWING FIG.)
   THIS REQUIREMENT SHOULD BE APPLIED AT SHIPMENT.
   PEEL OFF SHOULD NOT BE ALLOWED, DURING TRANSPORTATION.



5. 材料 MATERIAL
   キャリアテープ (CARRIER TAPE) : ポリスチレン (POLYSTYRENE)
   トップテープ (TOP TAPE) : PET, PE, PEF
   リール (REEL) : ポリスチレン(PS) <リサイクル材含む>
   POLYSTYRENE (PS)<RECYCLE MATERIAL CONTAINED>

503398-0891	8
EMBOSSED PACKAGE	極数 CIRCUITS
オーダー番号 ORDER NO.	
CONNECTOR SERIES No. 503398-0811	

PROPOSED
EC NO: J2010-0539
DRWN: YMATSUMOTO 2009/09/17
CHKD: YMATSUMOTO 2009/09/17
APPR: NMATSUMOTO 2009/09/17
DESCRIPTION
REV 0

GENERAL TOLERANCES (UNLESS SPECIFIED)

10 UNDER	±0.2
10 OVER 30 UNDER	±0.25
30 OVER	±0.3
ANGULAR ±1 °	

DRAFT WHERE APPLICABLE MUST REMAIN WITHIN DIMENSIONS

DIMENSION STYLE	MM ONLY
SCALE	4:1
DESIGN UNITS	METRIC
	THIRD ANGLE PROJECTION
DRAWN BY / DATE	YMATSUMOTO 2009/02/02
CHECKED BY / DATE	MTOMITA 2009/02/02
APPROVED BY / DATE	NUKITA 2009/02/02
TITLE	EMBOSSED TAPE PACKAGE FOR 503398-08**
	MOLEX INCORPORATED
MATERIAL NO.	SEE CHART
DOCUMENT NO.	SD-503398-002
SHEET NO.	1 OF 2
SIZE	A3

THIS DRAWING CONTAINS INFORMATION THAT IS PROPRIETARY TO MOLEX INCORPORATED AND SHOULD NOT BE USED WITHOUT WRITTEN PERMISSION

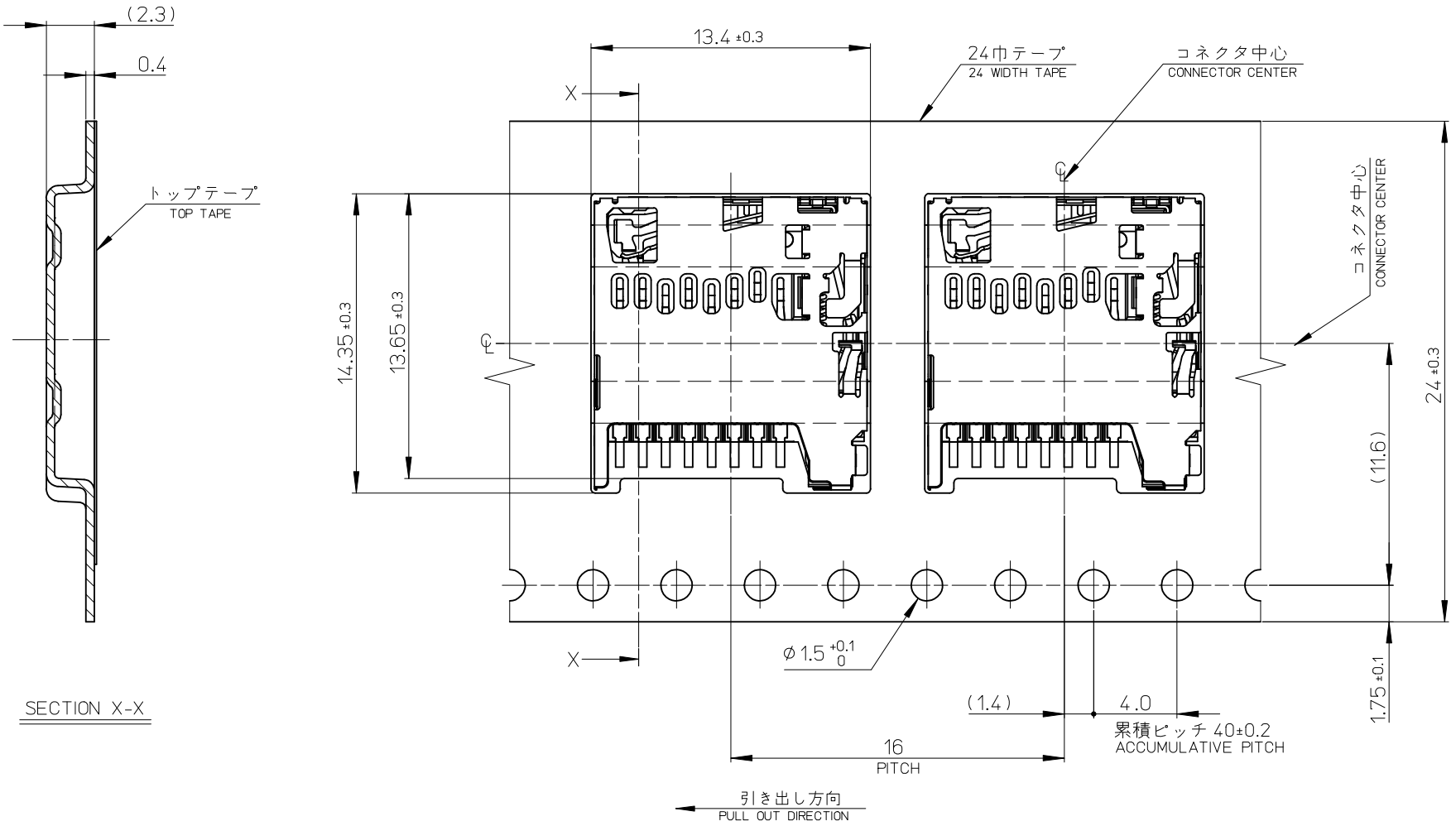

PROPOSED EC NO: J2010-05539 DRWN:YMATSUMOTO 2009/09/17 CH'KD:YMATSUMOTO 2009/09/17 APPR:NUKITA 2009/09/17	GENERAL TOLERANCES (UNLESS SPECIFIED)	DIMENSION STYLE: MM ONLY	SCALE: 5:1	DESIGN UNITS: METRIC	THIRD ANGLE PROJECTION
	10 UNDER ±0.2	DRAWN BY: YMATSUMOTO DATE: 2009/02/02	TITLE: EMBOSSED TAPE PACKAGE FOR 503398-08**		
	10 OVER 30 UNDER ±0.25	CHECKED BY: MTOMITA DATE: 2009/02/02			
	30 OVER ±0.3	APPROVED BY: NUKITA DATE: 2009/02/02	molex MOLEX INCORPORATED		
REV: 0	ANGULAR ±1 °	MATERIAL NO.: SEE CHART	DOCUMENT NO.: SD-503398-002	SHEET NO.: 2 OF 2	
DESCRIPTION	DRAFT WHERE APPLICABLE MUST REMAIN WITHIN DIMENSIONS	SIZE: A3	THIS DRAWING CONTAINS INFORMATION THAT IS PROPRIETARY TO MOLEX INCORPORATED AND SHOULD NOT BE USED WITHOUT WRITTEN PERMISSION		

tb_frame_A3_J_ME_S
Rev. D 2004/04/02
EN-02JA(021)