This document was generated on 05/08/2014

PLEASE CHECK WWW.MOLEX.COM FOR LATEST PART INFORMATION

Part Number: 503149-2400
Status: Active
Overview: CLIK-Mate™ Wire-to-Board Connectors
Description: 1.50mm Pitch CLIK-Mate™ Wire-to-Board Housing, Dual Row, Positive Lock, 24 Circuits

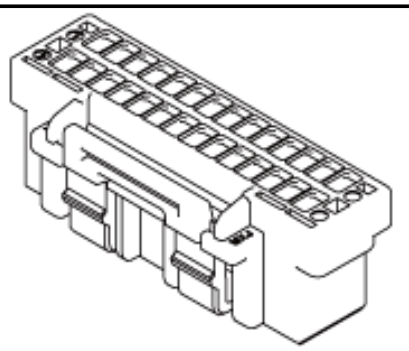

Series image - Reference only

Documents:

3D Model
Drawing (PDF)
Product Specification PS-503148-001 (PDF)
Product Specification PS-503154-001 (PDF)
Application Specification AS-503149-001 (PDF)
Packaging Specification SPK-503149-001 (PDF)
RoHS Certificate of Compliance (PDF)

General

Product Family	Crimp Housings
Series	503149
Application	Signal, Wire-to-Board
Overview	CLIK-Mate™ Wire-to-Board Connectors
Product Name	CLIK-Mate™
UPC	800756961705

Physical

Circuits (maximum)	24
Color - Resin	Beige
Gender	Plug
Glow-Wire Compliant	No
Keying to Mating Part	Yes
Lock to Mating Part	Yes
Net Weight	780.000/mg
Number of Rows	2
Packaging Type	Bag
Panel Mount	No
Pitch - Mating Interface	1.50mm
Polarized to Mating Part	Yes
Stackable	No
Temperature Range - Operating	-25°C to +85°C

Electrical

Current - Maximum per Contact	2A

Material Info

Reference - Drawing Numbers

Application Specification	AS-503149-001
Packaging Specification	SPK-503149-001
Product Specification	PS-503148-001, PS-503154-001, RPS-503148-001, RPS-503148-003, RPS-503154-001, RPS-503154-002, RPS-503154-003, RPS-503154-004, RPS-503154-005, RPS-503154-007, RPS-503154-008, RPS-503154-009, RPS-503154-010
Sales Drawing	SD-503149-001

EU RoHS
ELV and RoHS Compliant
REACH SVHC
Contains SVHC: No
Low-Halogen Status
Not Low-Halogen

China RoHS

Need more information on product environmental compliance?

Email productcompliance@molex.com
For a multiple part number RoHS Certificate of Compliance, click here

Please visit the Contact Us section for any non-product compliance questions.

Search Parts in this Series
503149Series

Mates With
503154 PCB Receptacle

Use With
502579 Crimp Terminal

This document was generated on 05/08/2014

PLEASE CHECK WWW.MOLEX.COM FOR LATEST PART INFORMATION