This document was generated on 05/24/2010

PLEASE CHECK WWW.MOLEX.COM FOR LATEST PART INFORMATION

Part Number: 5031481290

Status: Active

Description: 1.50mm (.059") Pitch CLIK-Mate™ Wire-to-Board PCB Receptacle, Dual Row, Right Angle, 12 Circuits

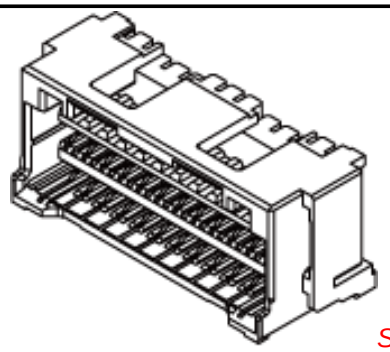

Series image - Reference only

Documents:

3D Model
Drawing (PDF)
Product Specification PS-503148-001 (PDF)
RoHS Certificate of Compliance (PDF)

General

Product Family	PCB Receptacles
Series	503148
Application	Wire-to-Board
Product Name	CLIK-Mate™

Physical

Circuits (Loaded)	12
Color - Resin	Beige
Durability (mating cycles max)	30
Glow-Wire Compliant	No
Keying to Mating Part	Yes
Lock to Mating Part	Yes
Mated Height (in)	0.362 In
Mated Height (mm)	9.20 mm
Material - Metal	Copper Alloy
Material - Plating Mating	Tin
Number of Rows	2
Orientation	Right Angle
PCB Locator	No
PCB Retention	Yes
Packaging Type	Embossed Tape on Reel
Pitch - Mating Interface (in)	0.059 In
Pitch - Mating Interface (mm)	1.50 mm
Polarized to Mating Part	Yes
Polarized to PCB	Yes
Stackable	No
Temperature Range - Operating	-25°C to +85°C
Termination Interface: Style	Surface Mount

Electrical

Current - Maximum per Contact	1A
Voltage - Maximum	100V

Material Info

Reference - Drawing Numbers

Application Specification	AS-503149-001
Product Specification	PS-503148-001, RPS-503148-001
Sales Drawing	SD-503148-001, SD-503148-002

EU RoHS
ELV and RoHS Compliant
REACH SVHC
Not Reviewed
Halogen-Free Status
Not Reviewed

China RoHS

Need more information on product environmental compliance?

Email productcompliance@molex.com
For a multiple part number RoHS Certificate of Compliance, click here

Please visit the Contact Us section for any non-product compliance questions.

Search Parts in this Series
503148Series

Mates With
503149 Crimp Housing . 502579 Crimp Terminal

This document was generated on 05/24/2010

PLEASE CHECK WWW.MOLEX.COM FOR LATEST PART INFORMATION

CONFIDENTIAL

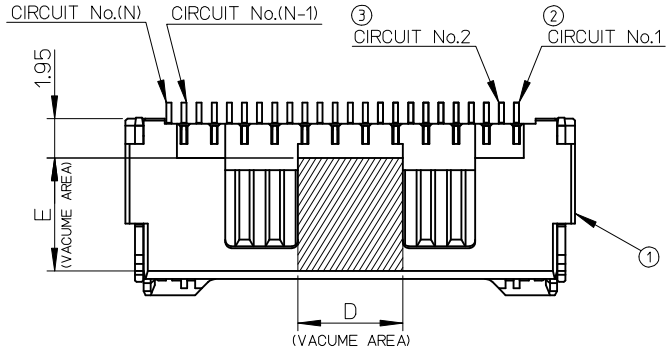

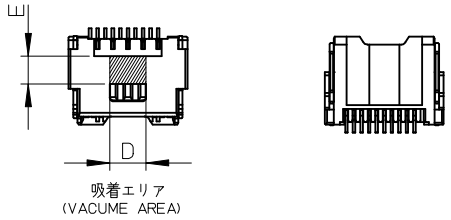

10極ハウジング形状
(HOUSING FORM OF 10CKT)
SCALE 2:1

No.	PART	MATERIAL
①	HOUSING	耐熱性樹脂 UL94V-0 HEATPROOF RESIN UL94V-0
②	TERMINAL A	銅合金 COPPER ALLOY
		錫メッキ：1.0 micro-meter MIN. TIN
③	TERMINAL B	ニッケルメッキ（下地）：1.0 micro-meter MIN. NICKEL (UNDER PLATING)
④	NAIL	銅合金 COPPER ALLOY
		錫メッキ：1.0 micro-meter MIN. TIN
		ニッケルメッキ（下地）：1.0 micro-meter MIN. NICKEL (UNDER PLATING)

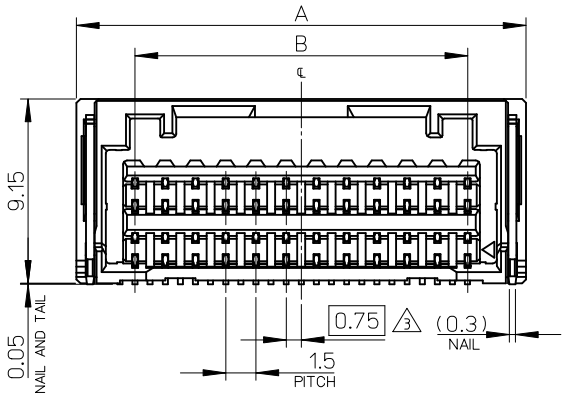

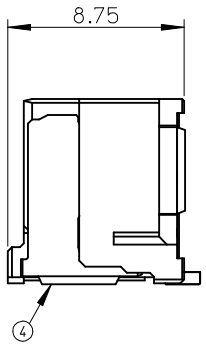

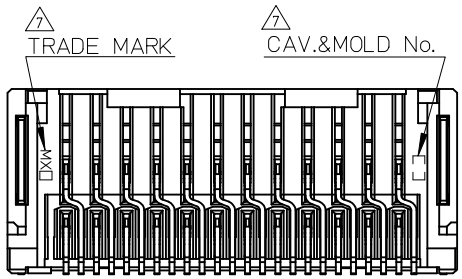

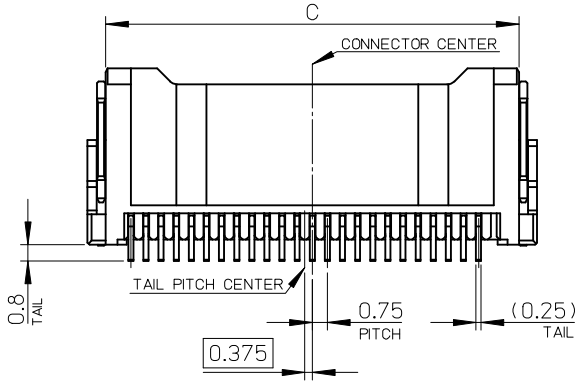

503148 - 249*	5.6	5.2	20.5	16.5	22.3	24
503148 - 209*	5.6	3.2	17.5	13.5	19.3	20
503148 - 169*	5.6	2.5	14.5	10.5	16.3	16
503148 - 129*	5.6	2.3	11.5	7.5	13.3	12
503148 - 109*	2.75	3.6	10	6	11.8	10
EMBOSSED TAPE PACKAGE オーダー番号 ORDER No.	E	D	C	B	A	CIRCUIT

REVISED
EC NO: J2010-0024 2009/07/03
DRWN:THANYU 2009/07/05
CH'KD:KASAKAWA
APPR:NUKITA 2009/07/06
DESCRIPTION
REV C

GENERAL TOLERANCES (UNLESS SPECIFIED)

10 UNDER	±0.2
10 OVER 30 UNDER	±0.25
30 OVER	±0.3
ANGULAR	±1 °

DRAFT WHERE APPLICABLE MUST REMAIN WITHIN DIMENSIONS

DIMENSION STYLE	MM ONLY
SCALE	4:1
DESIGN UNITS	METRIC
	THIRD ANGLE PROJECTION
DRAWN BY / DATE	T.HANYU 2007/11/2
CHECKED BY / DATE	K.ASAKAWA 2007/11/2
APPROVED BY / DATE	YO.ITO 2007/11/2
MATERIAL NO.	SEE CHART
TITLE	1.5 W/B CONN. DUAL R/A REC. ASSY
	MOLEX INCORPORATED
DOCUMENT NO.	SD-503148-001
SHEET NO.	1 OF 3
SIZE	A3

THIS DRAWING CONTAINS INFORMATION THAT IS PROPRIETARY TO MOLEX INCORPORATED AND SHOULD NOT BE USED WITHOUT WRITTEN PERMISSION

CONFIDENTIAL

NOTES

1. 嵌合相手：503149-****
   MATE WITH : 503149-****
2. 端子テール部及びネイルの平坦度：0.1mm MAX.
   TAIL AND NAIL COPLANARITY TO BE 0.1 MAX.
3. （極数／2）＝偶数に適用
   APPLY FOR (CIRCUIT SIZE/2)=EVEN
4. 端子テール部及びネイルに錫メッキを使用している為、
   外観に摺動痕が付く場合があります。
5. 製品番号
   MATERIAL No.

503148 - **9*

極数 CIRCUIT SIZE　　色 COLOR

COLOR	黒 BLACK	赤 RED	青 BLUE	緑 GREEN	ベージュ BEIGE (NATURAL)
COLOR No.	1	2	4	6	0

6. 本製品のプラスチック部に黒点・白点等が確認される場合や
   色合いが異なる場合がありますが、製品性能に影響はありません。
   THERE IS NO INFLUENCE IN THE PRODUCT
   PERFORMANCE THOUGH THE BLACK AND WHITE SPOT ETC.
   MIGHT BE CONFIRMED TO THE PLASTIC PART OF THIS PRODUCT AND
   THE SHADE MIGHT BE DIFFERENT.
7. トレードマーク：MXプラス1文字の製造工場を示すアルファベットにて表示
   但し"J"はJAPANを示す。（例 MXJ）
   キャビティー番号：1桁から2桁の数字にて表示
   金型番号：アルファベット1文字にて表示
   FORMED BY MX AND 1 MORE LETTER OF ALPHABET WHICH MEAN THE MANUFACTORY.
   BUT "J" MEANS JAPAN. (TO TRADE MARK) (e.g. MXJ)
   AND BY 1 - 2 DIGIT NUMBER (TO CAVITY No.)
   AND BY 1 LETTER OF ALPHABET (TO MOLD No.)
8. コネクタ下にパターン及びスルーホールを設置する場合、基板面からのパターン盛り上がりは、0.1mm MAX.とする事。
   但し、図示したパターン禁止エリアは除く。
   THE UPSURGE ON THE P.C.BOARD SIDE TO BE 0.1mm MAX.
   WHEN SET UP A PATTERN AND A THROUGH HALL UNDER THE CONNECTOR.
9. ELV及びRoHS適合品
   ELV AND RoHS COMPLIANT
10. オーダー番号及びコネクタシリーズ番号
    ORDER No. AND CONNECTOR SERIES No.

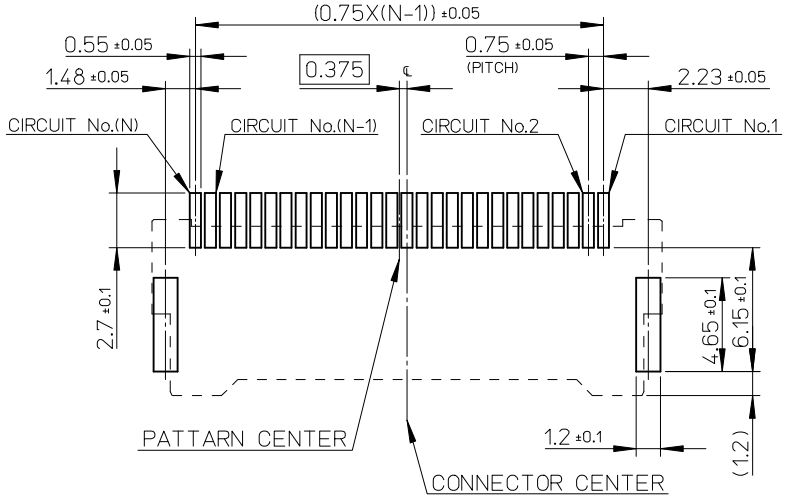

パターンレイアウト（参考）
PATTERN LAYOUT (REF.)

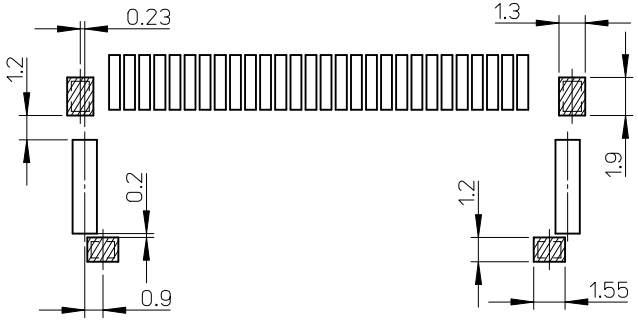

8 パターン禁止エリア（参考）
PATTERN PROHIBITION AREA (REF.)

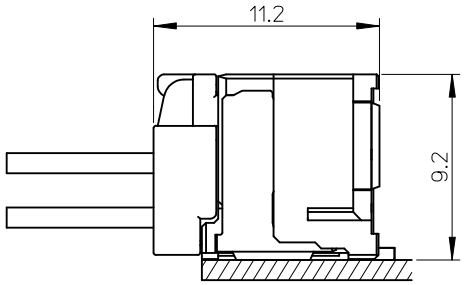

嵌合図
MATED CONNECTORES

REVISED
EC NO: J2010-0024　2009/07/03
DRWN:THANYU　2009/07/05
CH'KD:KASAKAWA
APPR:NUKITA　2009/07/06
DESCRIPTION
REV C

GENERAL TOLERANCES (UNLESS SPECIFIED)

10 UNDER	±0.2
10 OVER 30 UNDER	±0.25
30 OVER	±0.3
ANGULAR	±1 °

DRAFT WHERE APPLICABLE MUST REMAIN WITHIN DIMENSIONS

DIMENSION STYLE: MM ONLY	SCALE: 4:1	DESIGN UNITS: METRIC	THIRD ANGLE PROJECTION
DRAWN BY: T.HANYU　DATE: 2007/11/2	TITLE: 1.5 W/B CONN. DUAL R/A REC. ASSY		
CHECKED BY: K.ASAKAWA　DATE: 2007/11/2			
APPROVED BY: YO.ITO　DATE: 2007/11/2	molex MOLEX INCORPORATED		
MATERIAL NO.: SEE CHART	DOCUMENT NO.: SD-503148-001	SHEET NO.: 2 OF 3	
SIZE: A3	THIS DRAWING CONTAINS INFORMATION THAT IS PROPRIETARY TO MOLEX INCORPORATED AND SHOULD NOT BE USED WITHOUT WRITTEN PERMISSION		

CONFIDENTIAL

⚠10 ORDER No. AND CONNECTOR SERIES No.

HOUSING COLOR : BEIGE (NATURAL)			HOUSING COLOR : BLACK		HOUSING COLOR : RED	
24	503148 - 2490	503148 - **90	503148 - 2491	503148 - **91	503148 - 2492	503148 - **92
20	503148 - 2090		503148 - 2091		503148 - 2092	
16	503148 - 1690		503148 - 1691		503148 - 1692	
12	503148 - 1290		503148 - 1291		503148 - 1292	
10	503148 - 1090		503148 - 1091		503148 - 1092	
CIRCUIT	EMBOSSED TAPE PACKAGE オーダー番号 ORDER No.	CONNECTOR SERIES No. コネクタシリーズ番号	EMBOSSED TAPE PACKAGE オーダー番号 ORDER No.	CONNECTOR SERIES No. コネクタシリーズ番号	EMBOSSED TAPE PACKAGE オーダー番号 ORDER No.	CONNECTOR SERIES No. コネクタシリーズ番号

HOUSING COLOR : BLUE			HOUSING COLOR : GREEN	
24	503148 - 2494	503148 - **94	503148 - 2496	503148 - **96
20	503148 - 2094		503148 - 2096	
16	503148 - 1694		503148 - 1696	
12	503148 - 1294		503148 - 1296	
10	503148 - 1094		503148 - 1096	
CIRCUIT	EMBOSSED TAPE PACKAGE オーダー番号 ORDER No.	CONNECTOR SERIES No. コネクタシリーズ番号	EMBOSSED TAPE PACKAGE オーダー番号 ORDER No.	CONNECTOR SERIES No. コネクタシリーズ番号

REVISED
EC NO: J2010-0024 2009/07/03
DRWN:THANYU 2009/07/05
CH'KD:K.ASAKAWA 2009/07/06
APPR:NUKITA
DESCRIPTION
REV
C

GENERAL TOLERANCES (UNLESS SPECIFIED)

10 UNDER	±0.2
10 OVER 30 UNDER	±0.25
30 OVER	±0.3
ANGULAR ±1 °	

DRAFT WHERE APPLICABLE MUST REMAIN WITHIN DIMENSIONS

DIMENSION STYLE: MM ONLY	SCALE: 4:1	DESIGN UNITS: METRIC	THIRD ANGLE PROJECTION
DRAWN BY: T.HANYU DATE: 2007/11/2	TITLE: 1.5 W/B CONN. DUAL R/A REC. ASSY		
CHECKED BY: K.ASAKAWA DATE: 2007/11/2			
APPROVED BY: YO.ITO DATE: 2007/11/2	molex MOLEX INCORPORATED		
MATERIAL NO.: SEE CHART	DOCUMENT NO.: SD-503148-001	SHEET NO.: 3 OF 3	
SIZE: A3	THIS DRAWING CONTAINS INFORMATION THAT IS PROPRIETARY TO MOLEX INCORPORATED AND SHOULD NOT BE USED WITHOUT WRITTEN PERMISSION		

CONFIDENTIAL

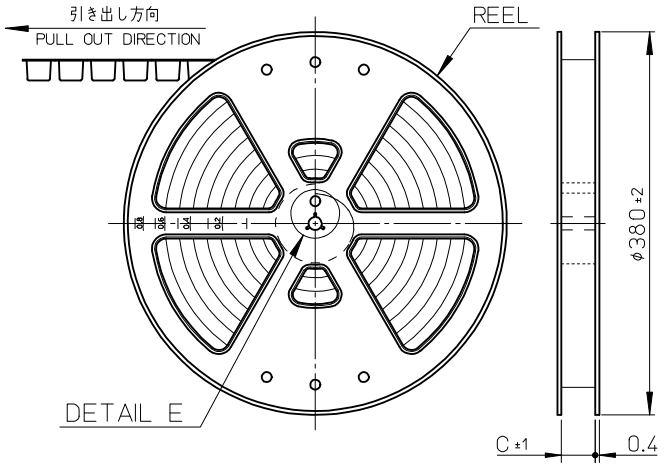

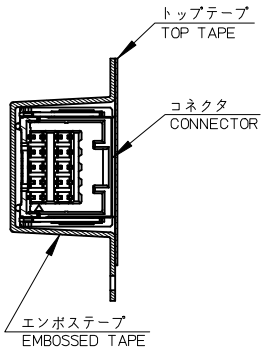

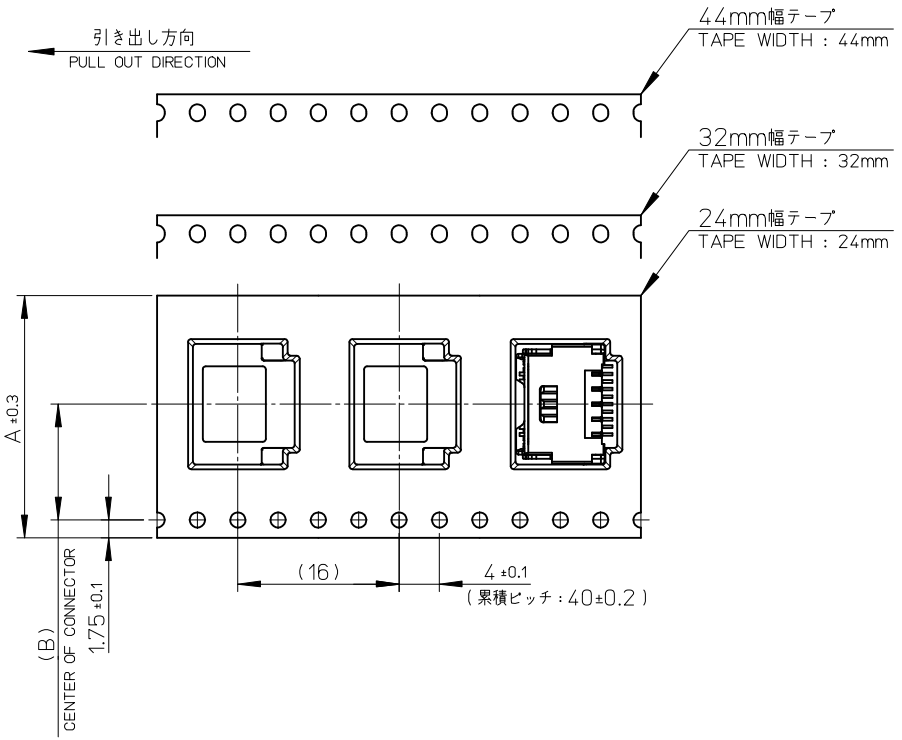

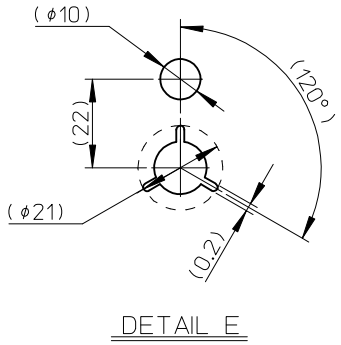

DETAIL E

C	B	エンボステープ幅 A WIDTH OF TAPE	⚠5 製品番号 MATERIAL No.	CIRCUIT No.
45.5	20.2	44	503148-249*	24
45.5	20.2	44	503148-209*	20
33.5	14.2	32	503148-169*	16
33.5	14.2	32	503148-129*	12
25.5	11.5	24	503148-109*	10

REVISED
EC NO: J2009-2874 2009/06/22
DRWN:THANYU 2009/06/22
CH'KD:KASAKAWA 2009/06/23
APPR:SI(CHI)KAWA
DESCRIPTION
A
REV

GENERAL TOLERANCES (UNLESS SPECIFIED)

10 UNDER	±0.2
10 OVER 30 UNDER	±0.25
30 OVER	±0.3
ANGULAR ±1 °	

DRAFT WHERE APPLICABLE MUST REMAIN WITHIN DIMENSIONS

DIMENSION STYLE: MM ONLY
SCALE: 2:1
DESIGN UNITS: METRIC
THIRD ANGLE PROJECTION

DRAWN BY: T.HANYU DATE: 2007/11/26
CHECKED BY: K.ASAKAWA DATE: 2007/11/26
APPROVED BY: YO.ITO DATE: 2007/11/26
MATERIAL NO.: SEE CHART

TITLE: EMBOSSED TAPE PACKAGE FOR 503148-****

molex MOLEX INCORPORATED

DOCUMENT NO.: SD-503148-002
SHEET NO.: 1 OF 2

SIZE A3

THIS DRAWING CONTAINS INFORMATION THAT IS PROPRIETARY TO MOLEX INCORPORATED AND SHOULD NOT BE USED WITHOUT WRITTEN PERMISSION

CONFIDENTIAL

NOTE

1. 梱包数量 ： 550個／リール
NUMBER OF CONNECTORS : 550 PIECES/REEL

2. リードテープ長さ
LEAD TAPE LENGTH

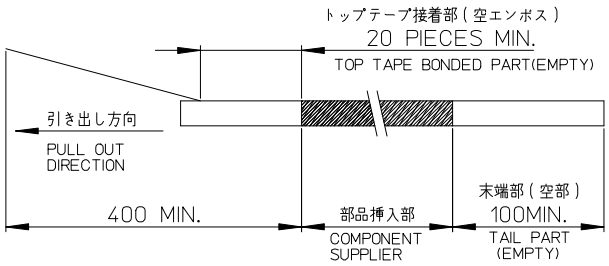

3. トップテープの剥離強度：0.1~0.3 N（10.2~132.5gf）
剥離方向は下記参照．
PEELING OFF FORCE OF TOP TAPE
PEELING DIRECTION AS SHOWN IN FOLLOWING FIGURE.

尚、本規格は出荷時に適用．（但し、輸送時に剥離が発生しない事）
THIS REQUIREMENT SHOULD BE APPLIED AT SHIPMENT.
PEEL OFF SHOLD NOT BE ALLOWED,DURING TRANSPORTION.

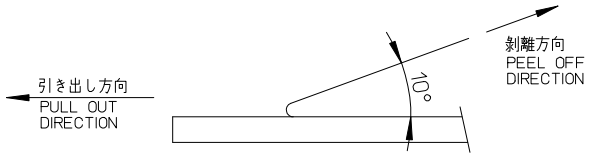

4. 製品詳細寸法については、SD-503148-001を参照して下さい．
PLEASE REFER TO SD-503148-001 FOR THE DETAILED DIMENSION OF THE CONNECTOR.

△5 MATERIAL No. AND CONNECTOR SERIES No.

HOUSING COLOR / CIRCUIT No.	MATERIAL No. 黒 BLACK	赤 RED	青 BLUE	緑 GREEN	ベージュ BEIGE (NATURAL)
CIRCUIT No.24	503148-2491	503148-2492	503148-2494	503148-2496	503148-2490
CIRCUIT No.20	2091	2092	2094	2096	2090
CIRCUIT No.16	1691	1692	1694	1696	1690
CIRCUIT No.12	1291	1292	1294	1296	1290
CIRCUIT No.10	503148-1091	503148-1092	503148-1094	503148-1096	503148-1090
CONNECTOR SERIES No.	503148-**91	503148-**92	503148-**94	503148-**96	503148-**90

6. 材料
MATERIAL
キャリアテープ ： ポリスチレン
CARRIER TAPE : POLYSTYRENE
トップテープ ： ポリエステル、ポリエチレン、ポリエチレンテレフタレート
TOP TAPE : POLYESTER,POLYETHLENE,POLYETHYLENE TEREPHTHALATE
リール ： ポリスチレン（リサイクル材含む）
REEL : POLYSTYRENE (RECYCLE MATERIAL CONTAINED)

7. ELV及びRoHS適合品
ELV AND RoHS COMPLIANT

REVISED
EC NO: J2009-2874 2009/06/22
DRWN:THANYU 2009/06/22
CH'KD:KASAKAWA 2009/06/23
APPR:S.ICHIKAWA
DESCRIPTION
A
REV

GENERAL TOLERANCES (UNLESS SPECIFIED)

10 UNDER	±0.2
10 OVER 30 UNDER	±0.25
30 OVER	±0.3
ANGULAR	±1 °

DRAFT WHERE APPLICABLE MUST REMAIN WITHIN DIMENSIONS

DIMENSION STYLE	MM ONLY
SCALE	2:1
DESIGN UNITS	METRIC
	THIRD ANGLE PROJECTION
DRAWN BY / DATE	T.HANYU 2007/11/26
CHECKED BY / DATE	K.ASAKAWA 2007/11/26
APPROVED BY / DATE	YO.ITO 2007/11/26
MATERIAL NO.	SEE CHART
TITLE	EMBOSSED TAPE PACKAGE FOR 503148-****
	MOLEX INCORPORATED
DOCUMENT NO.	SD-503148-002
SHEET NO.	2 OF 2
SIZE	A3

THIS DRAWING CONTAINS INFORMATION THAT IS PROPRIETARY TO MOLEX INCORPORATED AND SHOULD NOT BE USED WITHOUT WRITTEN PERMISSION