This document was generated on 05/31/2010

PLEASE CHECK WWW.MOLEX.COM FOR LATEST PART INFORMATION

Part Number: 5016481000
Status: Active
Overview: igrid
Description: 2.00mm (.079") Pitch iGrid™ Wire-to-Board Crimp Terminal, Female, 26-28 AWG, Reel

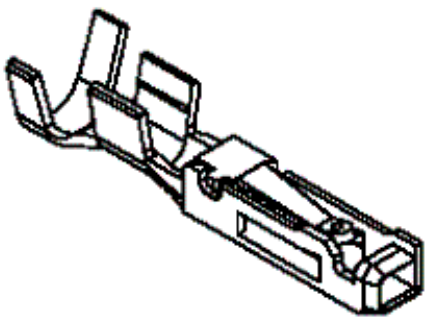

Series image - Reference only

Documents:
Drawing (PDF)
RoHS Certificate of Compliance (PDF)
Product Specification PS-501646-001 (PDF)

General

Product Family	Crimp Terminals
Series	501648
Crimp Quality Equipment	Yes
Overview	igrid
Product Name	iGrid™

Physical

Durability (mating cycles max)	30
Gender	Receptacle
Material - Metal	Copper Alloy
Material - Plating Mating	Tin
Packaging Type	Reel
Termination Interface: Style	Crimp or Compression
Wire Insulation Diameter	0.85-1.40 (.033-.055")
Wire Size AWG	26, 28
Wire Size mm²	0.079-0.136

Electrical

Current - Maximum per Contact	1.5A
Voltage - Maximum	250V AC (RMS)/DC

Material Info

Reference - Drawing Numbers

Product Specification	PS-501646-001, RPS-501646-001, RPS-501646-002, RPS-501646-006, RPS-501646-007
Sales Drawing	SD-501648-001

EU RoHS
ELV and RoHS Compliant
REACH SVHC
Contains SVHC: No
Halogen-Free Status
Halogen-Free

China RoHS

Need more information on product environmental compliance?

Email productcompliance@molex.com
For a multiple part number RoHS Certificate of Compliance, click here

Please visit the Contact Us section for any non-product compliance questions.

Search Parts in this Series
501648Series

Mates With
501645 Vertical Header . 501676 Right Angle Header

Use With
501646 Receptacle Housing

Application Tooling | **FAQ**

Tooling specifications and manuals are found by selecting the products below. Crimp Height Specifications are then contained in the Application Tooling Specification document.

Global

Description	Product #
Manual Extraction Tool	0638131500
Hand Crimp Tool for 2.00mm (.079") Pitch iGrid™ Wire-to-Board Crimp	0638192400

Terminals, 26-28 AWG	
T2 Terminator Tooling Die	0638518100
FineAdjust™ Applicator	0638618100

Japan

Description	Product #
Applicator for M211A Bench Press, 22-26 AWG, for 501647 and 501648 Crimp Terminal	5780213000
Side-Feed Applicator for Fully-Auto Machine, 22-26 AWG, for 501647 and 501648 Crimp Terminal	5780213200
Hand Crimp Tool - Straight Action	5780215400

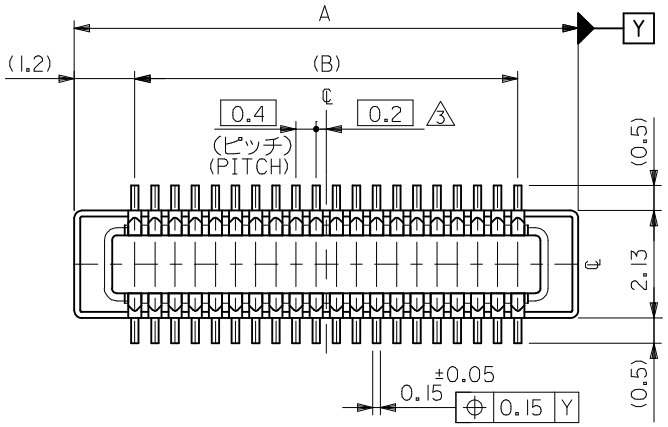

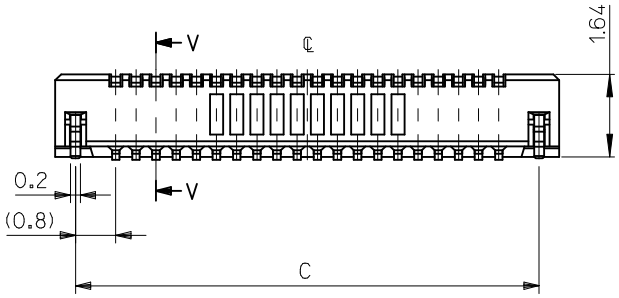

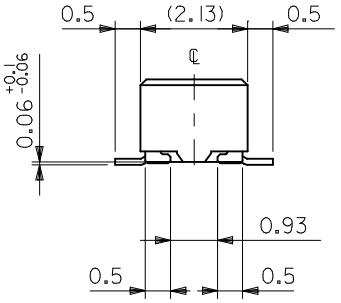

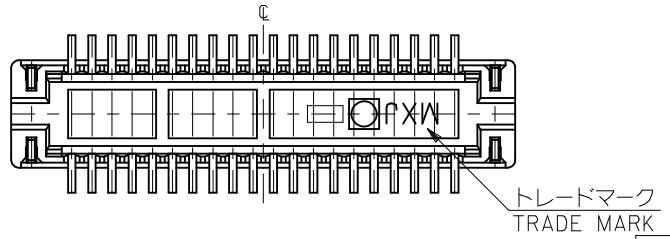

注記 NOTES:

1. 使用材料 MATERIAL
   ウエハー：液晶ポリマー（ＬＣＰ） ガラス充填 ＵＬ９４Ｖ－０（黒）
   WAFER: LIQUID CRYSTAL POLYMER(GLASS FILLED) UL94V-0 (COLOR:BLACK)
   ピン：黄銅（ｔ＝０．１２）
   PIN: BRASS (t=0.12)
   金具：リン青銅（ｔ＝０．２）
   FITTING NAIL: PHOSPHOR BRONZE (t=0.2)
2. メッキ仕様 PLATING
   ピン PIN
   金メッキ 0.2 マイクロメートル以上（コンタクト部）
   GOLD 0.2MICROMETER MINIMUM (CONTACT AREA)
   金メッキ 0.4 マイクロメートル以下（テール部）
   GOLD 0.4MICROMETER MAXIMUM (TAIL AREA)
   下地メッキ：ニッケルメッキ 1.5 マイクロメートル以上
   UNDER PLATING : NICKEL 1.5MICROMETER MINIMUM
   金具 FITTING NAIL
   錫メッキ 1.0 マイクロメートル以上
   TIN PLATING 1.0MICROMETER MINIMUM
   下地メッキ：ニッケルメッキ 1.0 マイクロメートル以上
   UNDER PLATING : NICKEL 1.0MICROMETER MINIMUM

③ （全極数／２）＝偶数の場合に適用。
APPLY FOR (CIRCUIT/2)=EVEN.

4. 嵌合相手：５１３３８シリーズ、５００９１３シリーズ
   MATE WITH : 51338 SERIES, 500913SERIES.
5. テール平坦度は、０．０８以下
   テール及び金具の平坦度は、０．１以下
   TAIL COPLANARITY TO BE 0.08MAXIMUM
   TAIL AND FITTING NAIL COPLANARITY TO BE 0.1 MAXIMUM
6. ELV 及び RoHS 適合品
   ELV AND RoHS COMPLIANT.

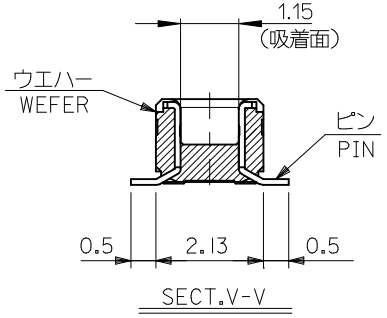

–	O	17.2	15.6	18.0	501745-0801	80
O	O	13.2	11.6	14.0	501745-0601	60
O	O	11.2	9.6	12.0	501745-0501	50
O	O	9.2	7.6	10.0	501745-0401	40
–	O	8.0	6.4	8.8	501745-0341	34
2.3	2.0	C	B	A	EMBOSSED PACKAGE	CKT.
MATED HEIGHT					ORDER NO. オーダー番号	

CONNECTOR SERIES No. 501745-***0

REVISED
EC NO: J2010-0060 2009/08/07
DRWN:MTAKAHASHI03 2009/08/17
CH'KD:THARUYAMA 2009/08/17
APPR:MSASAO
DESCRIPTION
REV

GENERAL TOLERANCES (UNLESS SPECIFIED)

10 UNDER	±0.2
10 OVER 30 UNDER	±0.25
30 OVER	±0.3
ANGULAR	±3 °

DRAFT WHERE APPLICABLE MUST REMAIN WITHIN DIMENSIONS

DIMENSION STYLE	MM ONLY
SCALE	---
DESIGN UNITS	METRIC
	THIRD ANGLE PROJECTION
DRAWN BY	K.SAITO
DATE	2007/03/01
CHECKED BY	K.KASAHARA
DATE	2007/03/01
APPROVED BY	N.UKITA
DATE	2007/03/01
MATERIAL NO.	SEE TABLE
TITLE	0.4 B-TO-B CONN. PLUG ASSY (HGT=2/2.3) WITH NAIL
	MOLEX INCORPORATED
DOCUMENT NO.	SD-501745-001
SHEET NO.	1 OF 2
SIZE	A3

THIS DRAWING CONTAINS INFORMATION THAT IS PROPRIETARY TO MOLEX INCORPORATED AND SHOULD NOT BE USED WITHOUT WRITTEN PERMISSION

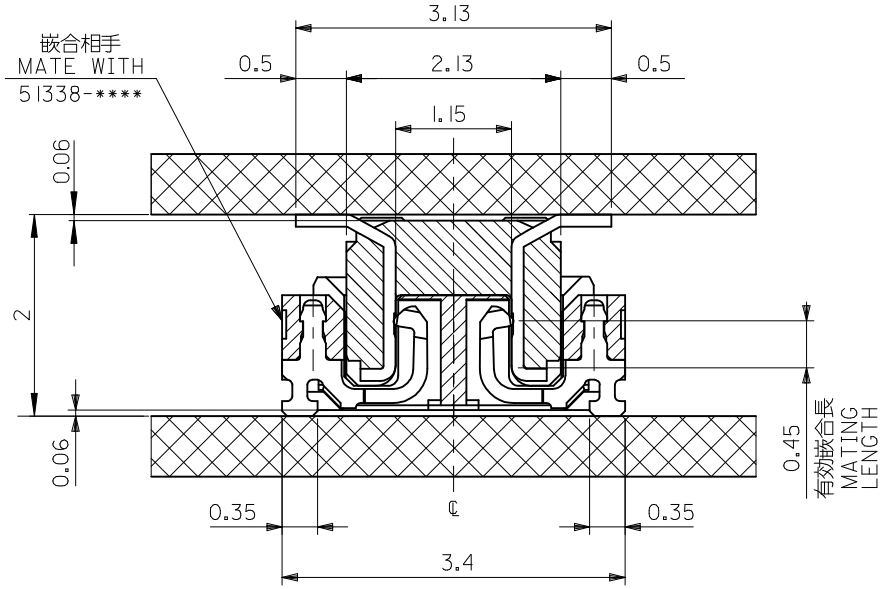

嵌合断面図（参考）
MATED DRAWING (REFERENCE)

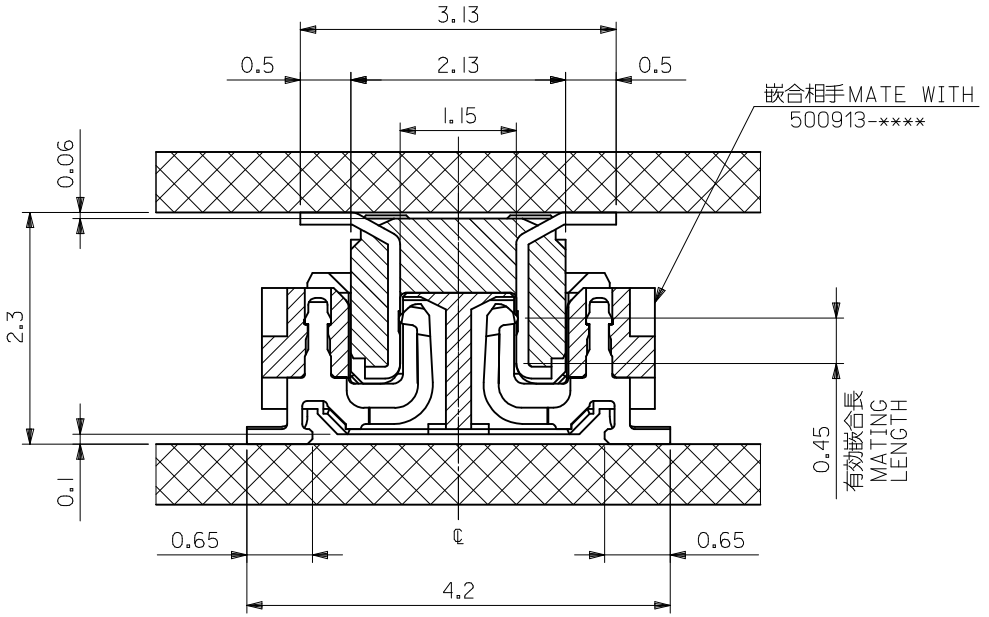

嵌合断面図（参考）
MATED DRAWING (REFERENCE)

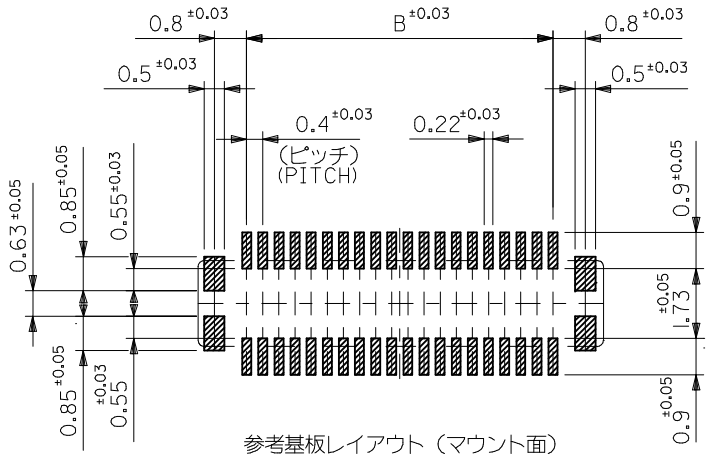

参考基板レイアウト（マウント面）
P.C.BOARD PATTERN DIMENSION.
(REFERENCE)
(MOUNTING AREA)

REVISED
EC NO: J2010-0060
DRWN:MTAKAHASHI03 2009/08/07
CH'KD:THIRATA 2009/08/17
APPR:MSASAO 2009/08/17
DESCRIPTION
REV
C

GENERAL TOLERANCES (UNLESS SPECIFIED)

10 UNDER	±0.2
10 OVER 30 UNDER	±0.25
30 OVER	±0.3
ANGULAR	±3 °

DRAFT WHERE APPLICABLE MUST REMAIN WITHIN DIMENSIONS

DIMENSION STYLE	MM ONLY
SCALE	---
DESIGN UNITS	METRIC
	THIRD ANGLE PROJECTION
DRAWN BY / DATE	K.SAITO 2007/03/01
CHECKED BY / DATE	K.KASAHARA 2007/03/01
APPROVED BY / DATE	N.UKITA 2007/03/01
MATERIAL NO.	SEE SHEET1
CONNECTOR SERIES No.	501745-***0
TITLE	0.4 B-TO-B CONN. PLUG ASSY (HGT=2/2.3) WITH NAIL
	MOLEX INCORPORATED
DOCUMENT NO.	SD-501745-001
SHEET NO.	2 OF 2
SIZE	A3

THIS DRAWING CONTAINS INFORMATION THAT IS PROPRIETARY TO MOLEX INCORPORATED AND SHOULD NOT BE USED WITHOUT WRITTEN PERMISSION

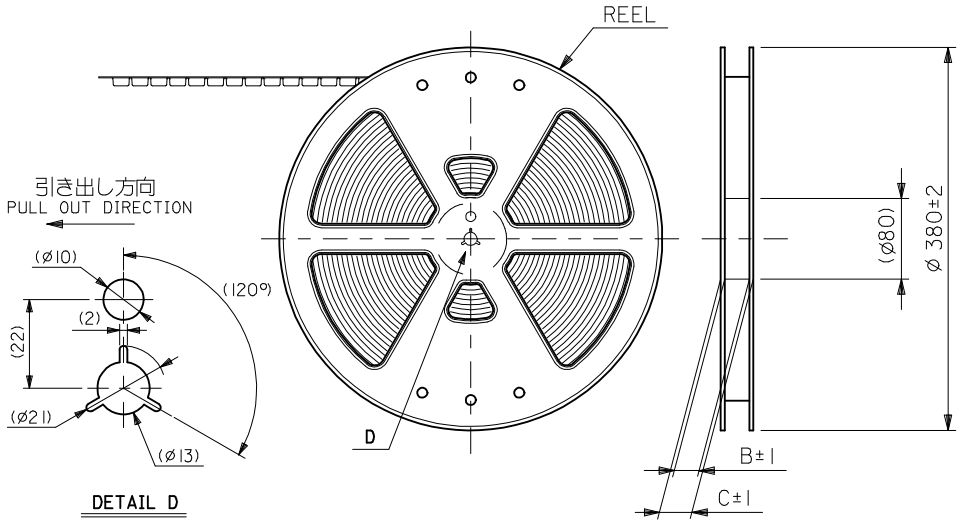

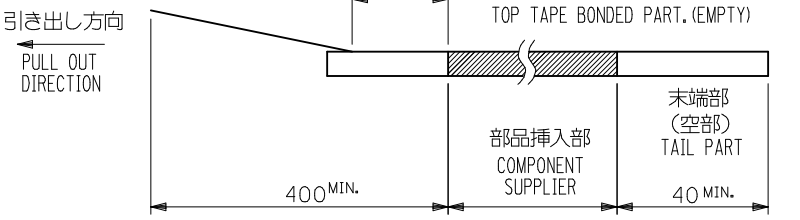

NOTES

1. 製品詳細寸法については製品単体図面を参照下さい。
   RE DETAILED DIMENSION, SEE PRODUCT DRAWING.
2. 梱包数量：２５００個／リール
   NUMBER OF CONNECTORS ：2500PCS/REEL
3. リードテープ長さ LEAD TAPE LENGTH
4. 材料 MATERIAL
   キャリアテープ（CARRIER TAPE）：ポリプロピレン（POLYPROPYLENE）
   トップテープ（TOPTAPE）： PET ，PE ，PEF
   リール（REEL）： ポリスチレン（ＰＳ） <リサイクル材を含む>
   POLYSTYRENE (PS) <RECYCLE MATERIAL CONTAINED>
5. ELV 及び RoHS 適合品
   ELV AND RoHS COMPLIANT.

CONNECTOR SERIES No. 501745-***1

REVISED
EC NO: J2010-0060
DRWN:MTAKAHASHI03 2009/08/07
CH'KD:THIRATA 2009/08/17
APPR:MSASAO 2009/08/17
DESCRIPTION
REV

GENERAL TOLERANCES (UNLESS SPECIFIED)

10 UNDER	±0.2
10 OVER 30 UNDER	±0.25
30 OVER	±0.3
ANGULAR ±3 °	

DRAFT WHERE APPLICABLE MUST REMAIN WITHIN DIMENSIONS

DIMENSION STYLE: MM ONLY
SCALE: ---
DESIGN UNITS: METRIC
THIRD ANGLE PROJECTION

DRAWN BY: K.SAITO DATE: 2007/03/01
CHECKED BY: K.KASAHARA DATE: 2007/03/01
APPROVED BY: N.UKITA DATE: 2007/03/01

TITLE: 0.4 B-TO-B CONN. PLUG ASSY (HGT=2/2.3) EMBSTP PKG

MOLEX INCORPORATED

MATERIAL NO.: SEE TABLE
DOCUMENT NO.: SD-501745-002
SHEET NO.: 1 OF 3
SIZE: A3

THIS DRAWING CONTAINS INFORMATION THAT IS PROPRIETARY TO MOLEX INCORPORATED AND SHOULD NOT BE USED WITHOUT WRITTEN PERMISSION

引き出し方向
PULL OUT DIRECTION

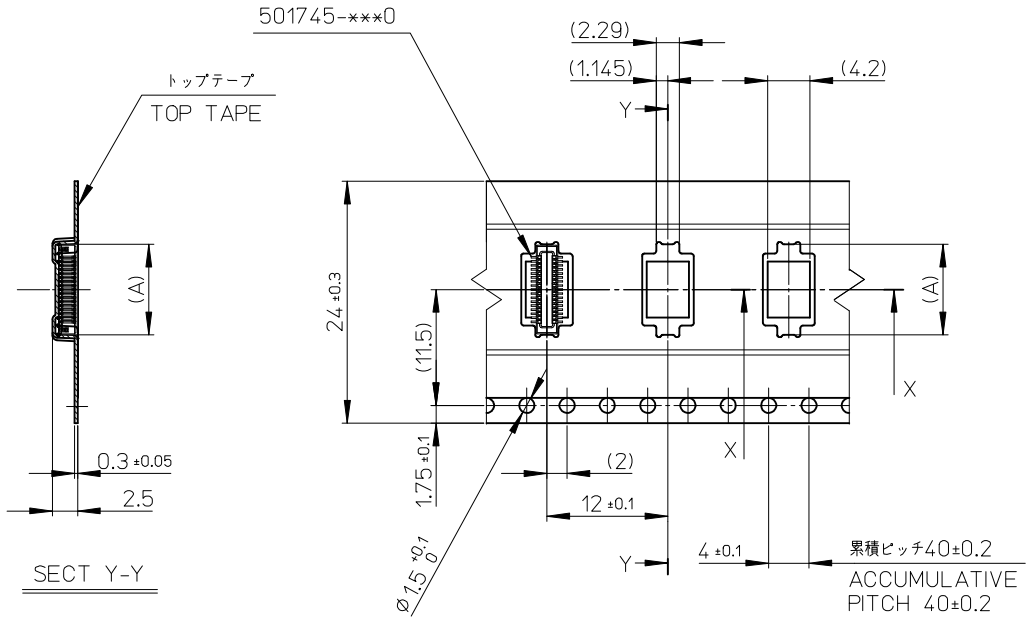

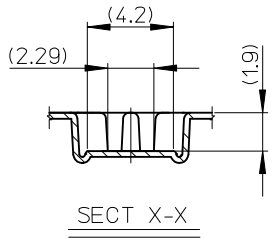

24	29.4	25.4	14.16	501745-0601	60
			12.16	501745-0501	50
			10.16	501745-0401	40
			8.96	501745-0341	34
キャリアテープ幅 CARRIER TAPE WIDTH	C	B	(A)	EMBOSSED PACKAGE ORDER NO.	極数 CKT.

CONNECTOR SERIES No. 501745-***1

REVISED
EC NO: J2010-0060 2009/08/07
DRWN:MTAKAHASHI03 2009/08/17
CH'KD:THIRATA 2009/08/17
APPR:MSASAO
DESCRIPTION
REV. C

GENERAL TOLERANCES (UNLESS SPECIFIED)

10 UNDER	±0.2
10 OVER 30 UNDER	±0.25
30 OVER	±0.3
ANGULAR	±3 °

DRAFT WHERE APPLICABLE MUST REMAIN WITHIN DIMENSIONS

DIMENSION STYLE: MM ONLY
SCALE: ---
DESIGN UNITS: METRIC
THIRD ANGLE PROJECTION

DRAWN BY: K.SAITO DATE: 2007/03/01
CHECKED BY: K.KASAHARA DATE: 2007/03/01
APPROVED BY: N.UKITA DATE: 2007/03/01

TITLE: 0.4 B-TO-B CONN. PLUG ASSY (HGT=2/2.3) EMBSTP PKG

MOLEX INCORPORATED

MATERIAL NO.: SEE TABLE
DOCUMENT NO.: SD-501745-002
SHEET NO.: 2 OF 3
SIZE: A3

THIS DRAWING CONTAINS INFORMATION THAT IS PROPRIETARY TO MOLEX INCORPORATED AND SHOULD NOT BE USED WITHOUT WRITTEN PERMISSION

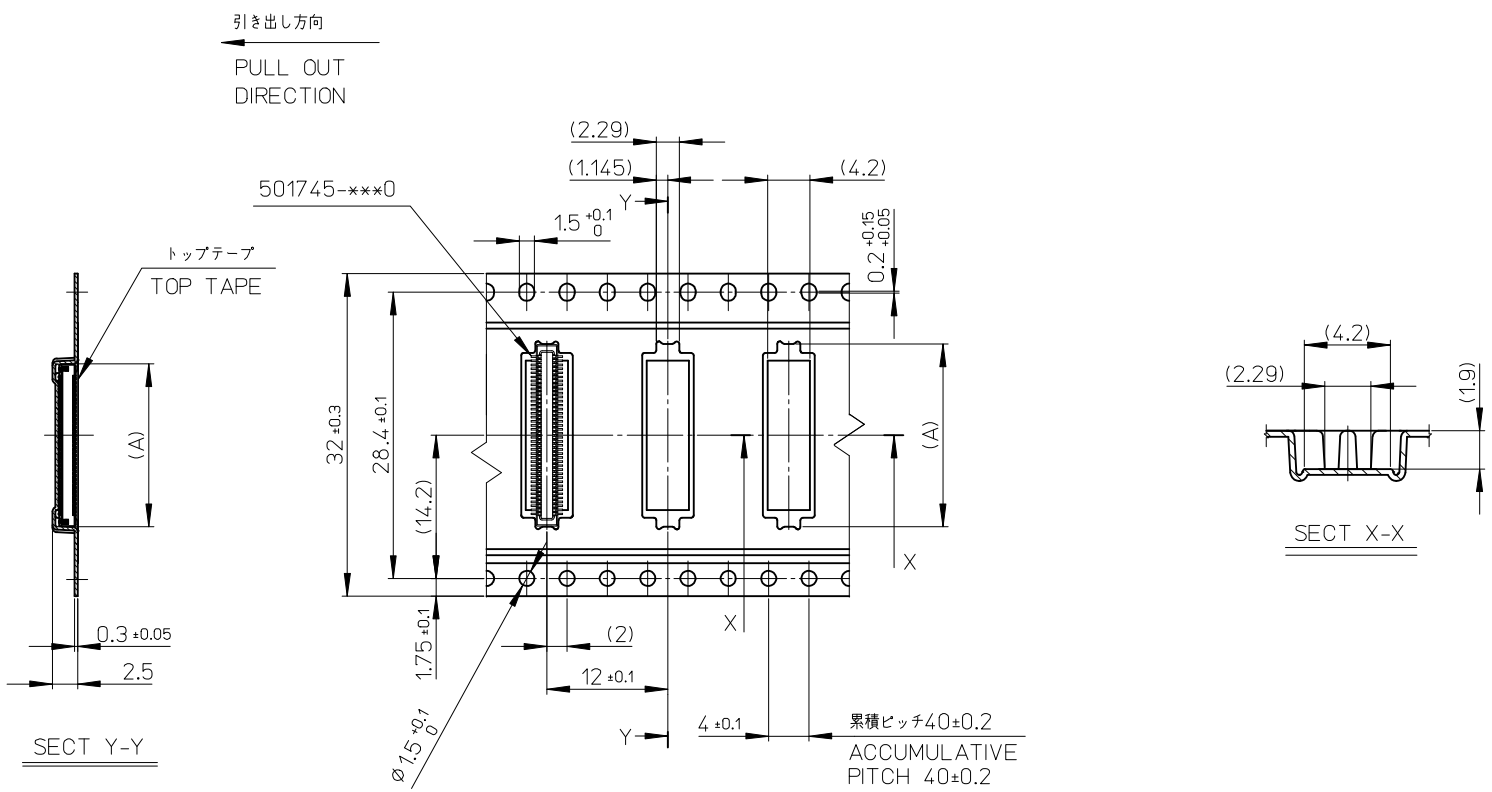

32	37.4	33.4	18.16	501745-0801	80
キャリアテープ幅 CARRIER TAPE WIDTH	C	B	(A)	EMBOSSED PACKAGE ORDER NO.	極数 CKT.

CONNECTOR SERIES No. 501745-***1

REVISED
EC NO: J2010-0060 2009/08/07
DRWN:MTAKAHASHI03 2009/08/17
CH'KD:THIRATA 2009/08/17
APPR:MSASAO

DESCRIPTION

REV: C

GENERAL TOLERANCES (UNLESS SPECIFIED)

10 UNDER	±0.2
10 OVER 30 UNDER	±0.25
30 OVER	±0.3
ANGULAR ±3 °	

DRAFT WHERE APPLICABLE MUST REMAIN WITHIN DIMENSIONS

DIMENSION STYLE: MM ONLY
SCALE: ---
DESIGN UNITS: METRIC
THIRD ANGLE PROJECTION

DRAWN BY: K.SAITO DATE: 2007/03/01
CHECKED BY: K.KASAHARA DATE: 2007/03/01
APPROVED BY: N.UKITA DATE: 2007/03/01

TITLE: 0.4 B-TO-B CONN. PLUG ASSY (HGT=2/2.3) EMBSTP PKG

MOLEX INCORPORATED

MATERIAL NO.: SEE TABLE
DOCUMENT NO.: SD-501745-002
SHEET NO.: 3 OF 3
SIZE: A3

THIS DRAWING CONTAINS INFORMATION THAT IS PROPRIETARY TO MOLEX INCORPORATED AND SHOULD NOT BE USED WITHOUT WRITTEN PERMISSION