This document was generated on 05/26/2010

PLEASE CHECK WWW.MOLEX.COM FOR LATEST PART INFORMATION

Part Number: 5015681407
Status: Active
Overview: picoclasp
Description: 1.00mm (.039") Pitch Pico-Clasp™ Wire-to-Board Header, Surface Mount, Single Row, Right Angle, with Positive Lock, 14 Circuits, Lead-free

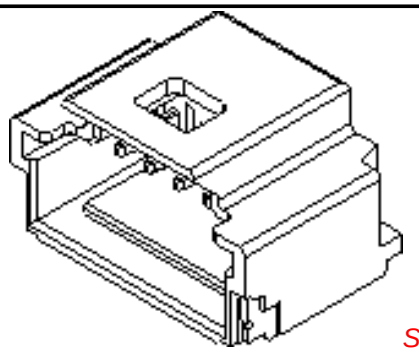

Series image - Reference only

Documents:

- 3D Model
- Drawing (PDF)
- Product Specification PS-501568-001 (PDF)
- RoHS Certificate of Compliance (PDF)

General

Product Family	PCB Headers
Series	501568
Application	Wire-to-Board
Overview	picoclasp
Product Name	Pico-Clasp™

Physical

Breakaway	No
Circuits (Loaded)	14
Color - Resin	Natural
Durability (mating cycles max)	30
Glow-Wire Compliant	No
Lock to Mating Part	Yes
Material - Metal	Brass, Phosphor Bronze
Material - Plating Mating	Tin
Material - Plating Termination	Tin
Material - Resin	Nylon
Number of Rows	1
Orientation	Right Angle
PCB Locator	No
PCB Retention	Yes
Packaging Type	Embossed Tape on Reel
Pitch - Mating Interface (in)	0.039 In
Pitch - Mating Interface (mm)	1.00 mm
Polarized to Mating Part	Yes
Polarized to PCB	No
Stackable	No
Temperature Range - Operating	-40°C to +85°C
Termination Interface: Style	Surface Mount

Electrical

Current - Maximum per Contact	1A
Voltage - Maximum	50V AC (RMS)/DC

Material Info

Reference - Drawing Numbers

Packaging Specification	SPK-501568-001
Product Specification	PS-501568-001, RPS-501331-001, RPS-501568-001, RPS-501568-002, RPS-501568-003, RPS-501568-004, RPS-501568-005, RPS-501940-001, RPS-501940-002
Sales Drawing	SD-501568-002, SD-501568-006

EU RoHS
ELV and RoHS Compliant
REACH SVHC
Not Reviewed
Halogen-Free Status
Not Reviewed

China RoHS

Need more information on product environmental compliance?

Email productcompliance@molex.com
For a multiple part number RoHS Certificate of Compliance, click here

Please visit the Contact Us section for any non-product compliance questions.

Search Parts in this Series
501568Series

Mates With
501330 Pico-Clasp™ Wire-to-Board Female Housing

This document was generated on 05/26/2010

PLEASE CHECK WWW.MOLEX.COM FOR LATEST PART INFORMATION

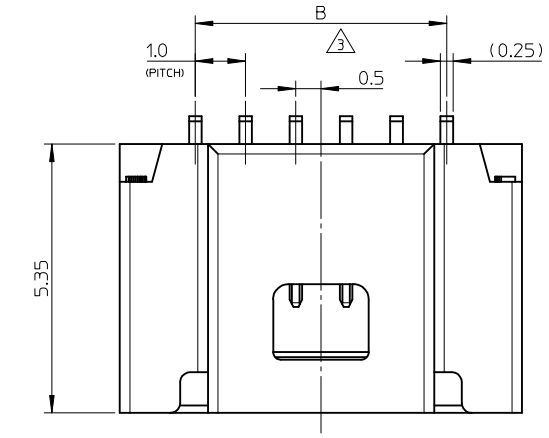

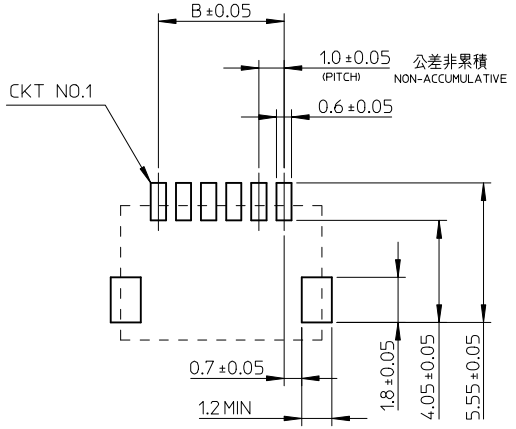

参考パターンレイアウト
RECOMMENDED PATTERN DIM.(REF)
SCALE:5-1

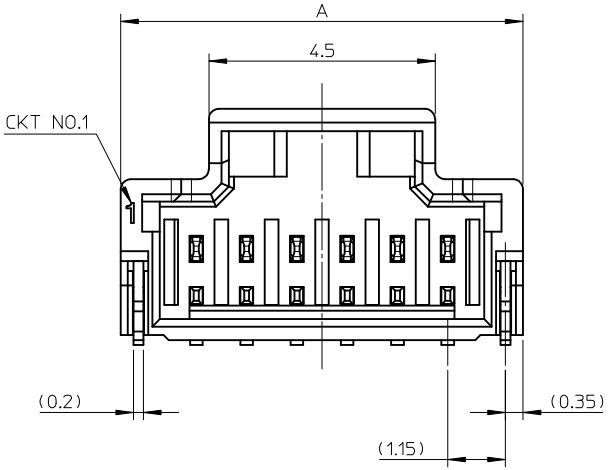

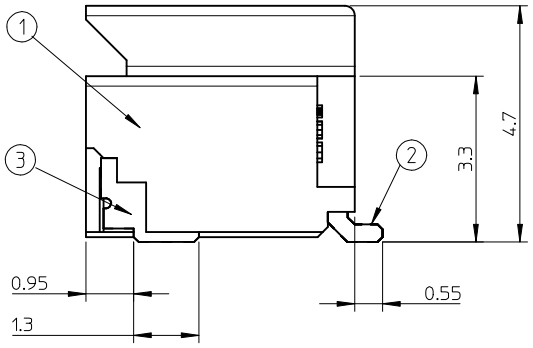

番号 NO.	部品 PART	材質 MATERIAL
①	ウエハー WAFER	耐熱ナイロン、UL94V-0 HEAT RESISTANCE NYLON, UL94V-0
②	ソルダーピン SOLDER PIN	りん青銅 PHOSPHOR BRONZE すずメッキ　：1 MICRO METER MINIMUM. TIN PLATING ニッケル下地メッキ　：1 MICRO METER MINIMUM. NICKEL UNDER PLATING
③	ネイル NAIL	黄銅 BRASS すずメッキ　：1 MICRO METER MINIMUM. TIN PLATING ニッケル下地メッキ　：1 MICRO METER MINIMUM. NICKEL UNDER PLATING

14.0	17.0	15
13.0	16.0	14
12.0	15.0	13
11.0	14.0	12
10.0	13.0	11
9.0	12.0	10
8.0	11.0	9
7.0	10.0	8
6.0	9.0	7
5.0	8.0	6
B	A	極数 CIRCUITS

NOTES

1. かん合相手　：501330-****
   MATE WITH : 501330-****
2. ソルダーピン及びネールの平坦度は0.1MAX.
   SOLDER PIN AND NAIL COPLANARITY TO BE 0.1MAX.
3. 極数＝偶数に適用
   APPLY FOR CKT SIZE=EVEN
4. 2～5極は、SD-501568-001を参照下さい。
   REFER TO SD-501568-001 ABOUT 2-5CKT.
5. ELV AND RoHS COMPLIANT.

REVISED
EC NO: J2010-0339
DRWN:TNAKAGAWA01 2009/09/01
CHKD:HMATSUMOTO 2009/09/01
APPR:HHIRATA 2009/09/01
DESCRIPTION
REV
E

GENERAL TOLERANCES (UNLESS SPECIFIED)

10 UNDER	±0.2
10 OVER 30 UNDER	±0.25
30 OVER	±0.3
ANGULAR	±3 °

DRAFT WHERE APPLICABLE MUST REMAIN WITHIN DIMENSIONS

DIMENSION STYLE	MM ONLY
SCALE	10:1
DESIGN UNITS	METRIC
	THIRD ANGLE PROJECTION
DRAWN BY	AMIZUMURA
DATE	2005/01/19
CHECKED BY	MYAGI
DATE	2005/01/19
APPROVED BY	ANODA
DATE	2005/01/19
MATERIAL NO.	SEE SHEET 2
TITLE	1.0 WIRE TO BOARD CONN. 1-ROW R/A WAFER ASSY 6-15CKT
	MOLEX INCORPORATED
DOCUMENT NO.	SD-501568-002
SHEET NO.	1 OF 2
SIZE	A3

CONNECTOR SERIES No. 501568-***9

THIS DRAWING CONTAINS INFORMATION THAT IS PROPRIETARY TO MOLEX INCORPORATED AND SHOULD NOT BE USED WITHOUT WRITTEN PERMISSION

紫 PA46 VIOLET	橙 PA46 ORANGE	茶 PA46 BROWN	緑 PA46 GREEN	色 COLOR
501568-1597	501568-1587	501568-1577	501568-1567	15
501568-1497	501568-1487	501568-1477	501568-1467	14
501568-1397	501568-1387	501568-1377	501568-1367	13
501568-1297	501568-1287	501568-1277	501568-1267	12
501568-1197	501568-1187	501568-1177	501568-1167	11
501568-1097	501568-1087	501568-1077	501568-1067	10
501568-0997	501568-0987	501568-0977	501568-0967	9
501568-0897	501568-0887	501568-0877	501568-0867	8
501568-0797	501568-0787	501568-0777	501568-0767	7
501568-0697	501568-0687	501568-0677	501568-0667	6
EMBOSSED PACKAGE	EMBOSSED PACKAGE	EMBOSSED PACKAGE	EMBOSSED PACKAGE	極数 CIRCUITS
オーダー番号 ORDER NO.	オーダー番号 ORDER NO.	オーダー番号 ORDER NO.	オーダー番号 ORDER NO.	
			CONNECTOR SERIES No. 501568-***9	

青 PA46 BLUE	黄 PA46 YELLOW	赤 PA46 RED	黒 PA46 BLACK	自然色 PA6T NATURAL	色 COLOR
501568-1547	501568-1537	501568-1527		501568-1507	15
501568-1447	501568-1437	501568-1427		501568-1407	14
501568-1347	501568-1337	501568-1327		501568-1307	13
501568-1247	501568-1237	501568-1227		501568-1207	12
501568-1147	501568-1137	501568-1127		501568-1107	11
501568-1047	501568-1037	501568-1027		501568-1007	10
501568-0947	501568-0937	501568-0927	501568-0917	501568-0907	9
501568-0847	501568-0837	501568-0827	501568-0817	501568-0807	8
501568-0747	501568-0737	501568-0727		501568-0707	7
501568-0647	501568-0637	501568-0627	501568-0617	501568-0607	6
EMBOSSED PACKAGE	EMBOSSED PACKAGE	EMBOSSED PACKAGE	EMBOSSED PACKAGE	EMBOSSED PACKAGE	極数 CIRCUITS
オーダー番号 ORDER NO.	オーダー番号 ORDER NO.	オーダー番号 ORDER NO.	オーダー番号 ORDER NO.	オーダー番号 ORDER NO.	
				CONNECTOR SERIES No. 501568-***9	

REVISED
EC NO: J2010-0339
DRWN:TNAKAGAWA01 2009/09/01
CHKD:HMATSUMOTO 2009/09/01
APPR:HHIRATA 2009/09/01
DESCRIPTION
REV E

GENERAL TOLERANCES (UNLESS SPECIFIED)

10 UNDER	±0.2
10 OVER 30 UNDER	±0.25
30 OVER	±0.3
ANGULAR	±3 °

DRAFT WHERE APPLICABLE MUST REMAIN WITHIN DIMENSIONS

DIMENSION STYLE: MM ONLY
SCALE: 1:1
DESIGN UNITS: METRIC
THIRD ANGLE PROJECTION

DRAWN BY: AMIZUMURA DATE: 2005/01/19
CHECKED BY: MYAGI DATE: 2005/01/19
APPROVED BY: ANODA DATE: 2005/01/19

TITLE: 1.0 WIRE TO BOARD CONN. 1-ROW R/A WAFER ASSY 6-15CKT

MOLEX INCORPORATED

MATERIAL NO.: SEE TABLE
DOCUMENT NO.: SD-501568-002
SHEET NO.: 2 OF 2
SIZE: A3

THIS DRAWING CONTAINS INFORMATION THAT IS PROPRIETARY TO MOLEX INCORPORATED AND SHOULD NOT BE USED WITHOUT WRITTEN PERMISSION

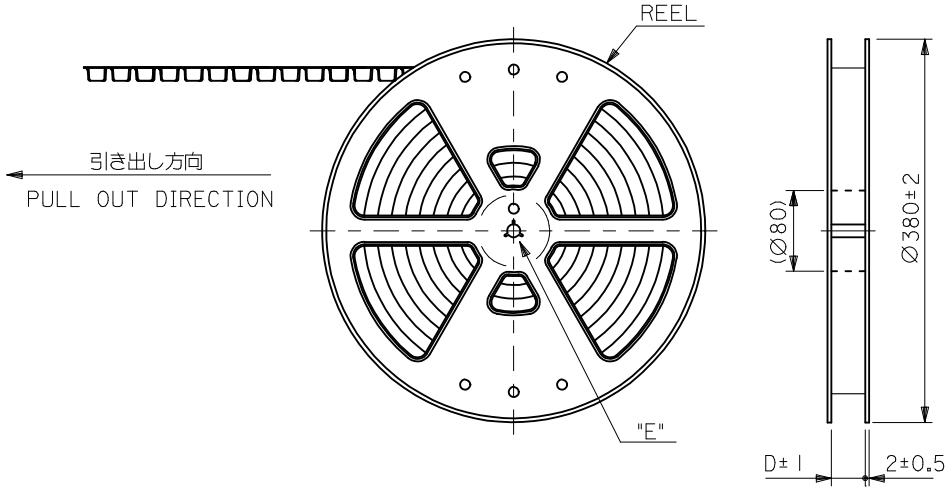

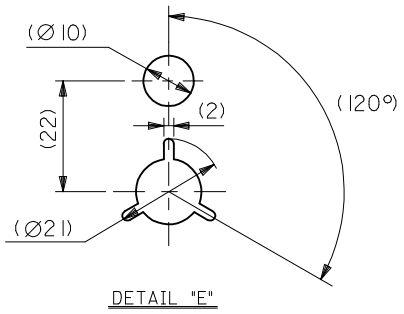

DETAIL "E"

NOTES

1. 製品詳細寸法は製品単体図面を参照して下さい.
   FOR DETAIL OF CONNECTOR DIMENSIONS,PLEASE SEE THE DRAWING OF CONNECTOR ITSELF(NOT PACKAGED).
2. 梱包数量： 1300 個／リール
   NUMBER OF CONNECTORS : 1300PIECES/REEL
3. リードテープ長さ
   LEAD TAPE LENGTH

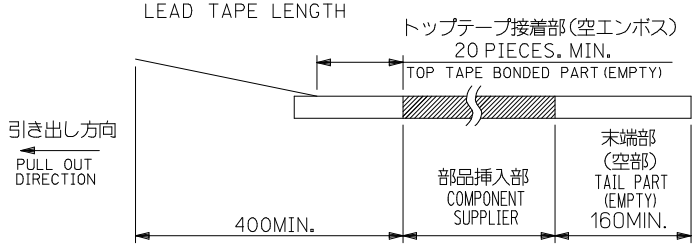

4. 材料
   MATERIAL
   キャリアテープ：ポリプロピレン
   CARRIER TAPE:POLYPROPYLENE
   トップテープ：PET, PE, REF
   TOP TAPE
   リール：ポリスチレン〈リサイクル材を含む〉
   REEL : POLYSTYRENE <RECYCLE MATERIAL CONTAINED>
5. ELV AND RoHS COMPLIANT.
6. ハイバリア梱包（シリカゲル入り）対応品である.(501568-**07除く)
   THIS PRODUCT IS HIGH BARRIER PACKAGE.(WITH SILICAGEL) (BESIDES 501568-**07)
7. 開梱後の保管条件に注意のこと.（ハイバリア品対象：PS-501568-001参照）
   REFER TO PS-501568-001(HIGH BARRIER PRODUCT) FOR CONDITIONS AFTER OPEN.

REVISED			
E	EC NO: J2010-0339	DRWN:TNAKAGAWA01	2009/09/01
		CHKD:HMATSUMOTO	2009/09/01
		APPR:HHIRATA	2009/09/01

DESCRIPTION / REV

GENERAL TOLERANCES (UNLESS SPECIFIED)

10 UNDER	±0.2
10 OVER 30 UNDER	±0.25
30 OVER	±0.3
ANGULAR	±1 °

DRAFT WHERE APPLICABLE MUST REMAIN WITHIN DIMENSIONS

DIMENSION STYLE: MM ONLY	SCALE: ---	DESIGN UNITS: METRIC	THIRD ANGLE PROJECTION
DRAWN BY: AMIZUMURA	DATE: 2005/1/26	TITLE: 1.0 WIRE TO BOARD CONN. WAFER ASS'Y (1-ROW R/A) EMBTP PKG	
CHECKED BY: MYAGI	DATE: 2005/1/26		
APPROVED BY: ANODA	DATE: 2005/1/26	molex MOLEX INCORPORATED	
MATERIAL NO.: SEE SHEET 3		DOCUMENT NO.: SD-501568-006	SHEET NO.: 1 OF 3
SIZE: A3		THIS DRAWING CONTAINS INFORMATION THAT IS PROPRIETARY TO MOLEX INCORPORATED AND SHOULD NOT BE USED WITHOUT WRITTEN PERMISSION	

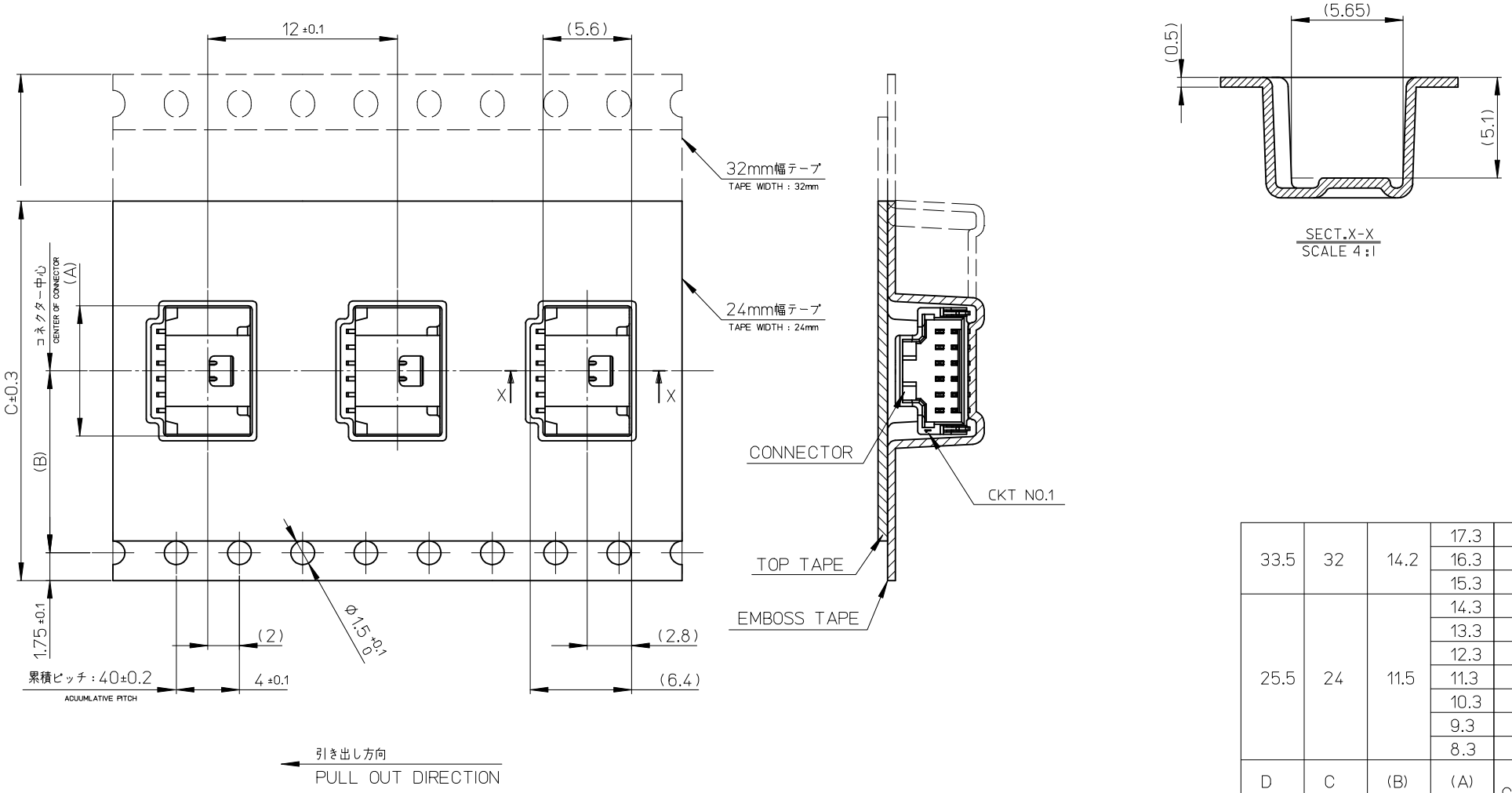

D	C	(B)	(A)	極数 CIRCUITS
33.5	32	14.2	17.3	15
			16.3	14
			15.3	13
25.5	24	11.5	14.3	12
			13.3	11
			12.3	10
			11.3	9
			10.3	8
			9.3	7
			8.3	6

CONNECTOR SERIES No. 501568-***9

REVISED
EC NO: J2010-0339 2009/09/01
DRWN:TNAKAGAWA01 2009/09/01
CH'KD:HMATSUMOTO 2009/09/01
APPR:HHIRATA 2009/09/01
DESCRIPTION
REV
E

GENERAL TOLERANCES (UNLESS SPECIFIED)

10 UNDER	±0.2
10 OVER 30 UNDER	±0.25
30 OVER	±0.3
ANGULAR ±3 °	

DRAFT WHERE APPLICABLE MUST REMAIN WITHIN DIMENSIONS

DIMENSION STYLE: MM ONLY
SCALE: ---
DESIGN UNITS: METRIC
THIRD ANGLE PROJECTION

DRAWN BY: AMIZUMURA DATE: 2005/1/26
CHECKED BY: MYAGI DATE: 2005/1/26
APPROVED BY: ANODA DATE: 2005/1/26
MATERIAL NO.: SEE SHEET 3

TITLE: 1.0 WIRE TO BOARD CONN. WAFER ASS'Y (1-ROW R/A) EMBTP PKG

MOLEX INCORPORATED

DOCUMENT NO.: SD-501568-006
SHEET NO.: 2 OF 3

SIZE A3

THIS DRAWING CONTAINS INFORMATION THAT IS PROPRIETARY TO MOLEX INCORPORATED AND SHOULD NOT BE USED WITHOUT WRITTEN PERMISSION

紫 VIOLET	橙 ORANGE	茶 BROWN	緑 GREEN	色 COLOR
501568-1597	501568-1587	501568-1577	501568-1567	15
501568-1497	501568-1487	501568-1477	501568-1467	14
501568-1397	501568-1387	501568-1377	501568-1367	13
501568-1297	501568-1287	501568-1277	501568-1267	12
501568-1197	501568-1187	501568-1177	501568-1167	11
501568-1097	501568-1087	501568-1077	501568-1067	10
501568-0997	501568-0987	501568-0977	501568-0967	9
501568-0897	501568-0887	501568-0877	501568-0867	8
501568-0797	501568-0787	501568-0777	501568-0767	7
501568-0697	501568-0687	501568-0677	501568-0667	6
EMBOSSED PACKAGE	EMBOSSED PACKAGE	EMBOSSED PACKAGE	EMBOSSED PACKAGE	極数 CIRCUTIS
オーダー番号 ORDER NO.	オーダー番号 ORDER NO.	オーダー番号 ORDER NO.	オーダー番号 ORDER NO.	
			CONNECTOR SERIES No. 501568-***9	

青 BLUE	黄 YELLOW	赤 RED	黒 BLACK	自然色 NATURAL	色 COLOR
501568-1547	501568-1537	501568-1527		501568-1507	15
501568-1447	501568-1437	501568-1427		501568-1407	14
501568-1347	501568-1337	501568-1327		501568-1307	13
501568-1247	501568-1237	501568-1227		501568-1207	12
501568-1147	501568-1137	501568-1127		501568-1107	11
501568-1047	501568-1037	501568-1027		501568-1007	10
501568-0947	501568-0937	501568-0927	501568-0917	501568-0907	9
501568-0847	501568-0837	501568-0827	501568-0817	501568-0807	8
501568-0747	501568-0737	501568-0727		501568-0707	7
501568-0647	501568-0637	501568-0627	501568-0617	501568-0607	6
EMBOSSED PACKAGE	EMBOSSED PACKAGE	EMBOSSED PACKAGE	EMBOSSED PACKAGE	EMBOSSED PACKAGE	極数 CIRCUTIS
オーダー番号 ORDER NO.	オーダー番号 ORDER NO.	オーダー番号 ORDER NO.	オーダー番号 ORDER NO.	オーダー番号 ORDER NO.	
				CONNECTOR SERIES No. 501568-***9	

REVISED
E EC NO: J2010-0339 2009/09/01 DRWN:TNAKAGAWA01
CH'KD:HMATSUMOTO 2009/09/01
APPR:HHIRATA 2009/09/01
DESCRIPTION
REV

GENERAL TOLERANCES (UNLESS SPECIFIED)

10 UNDER	±---
10 OVER 30 UNDER	±---
30 OVER	±---
ANGULAR	±--- °

DRAFT WHERE APPLICABLE MUST REMAIN WITHIN DIMENSIONS

DIMENSION STYLE	MM ONLY
SCALE	---
DESIGN UNITS	METRIC
	THIRD ANGLE PROJECTION
DRAWN BY	AMIZUMURA
DATE	2005/1/26
CHECKED BY	MYAGI
DATE	2005/1/26
APPROVED BY	ANODA
DATE	2005/1/26
MATERIAL NO.	SEE TABLE
TITLE	1.0 WIRE TO BOARD CONN. WAFER ASS'Y (1-ROW R/A) EMBTP PKG
	MOLEX INCORPORATED
DOCUMENT NO.	SD-501568-006
SHEET NO.	3 OF 3
SIZE	A3

THIS DRAWING CONTAINS INFORMATION THAT IS PROPRIETARY TO MOLEX INCORPORATED AND SHOULD NOT BE USED WITHOUT WRITTEN PERMISSION