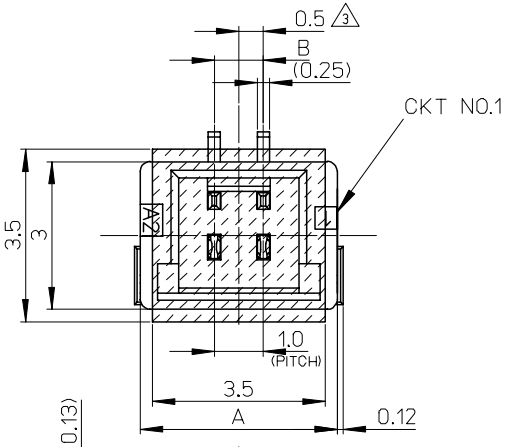


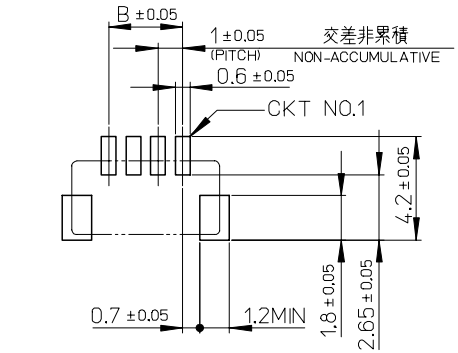


参考パターンレイアウト
RECCOMENDED PATTERN DIM. (REF)
SCALE:5-1

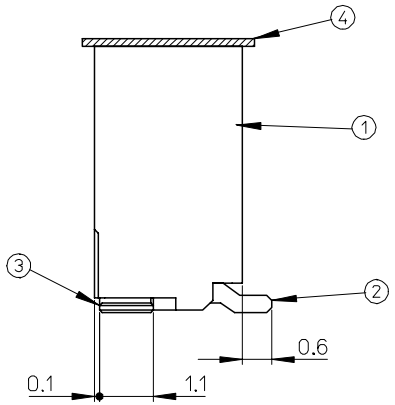


| 番号 NO. | 部品 PART | 材質 MATERIAL |
|---|---|---|
| ① | ウエハー WAFER | 46ナイロン UL94V-0 色：自然色<br>46 NYLON , UL94V-0 , COLOR:NATURAL |
| ② | ソルダーピン SOLDER PIN | りん青銅<br>PHOSPHOR BRONZE<br>錫メッキ：1.0μmMIN.<br>TIN<br>ニッケルメッキ（下地）：1.0μmMIN.<br>NICKEL(UNDER PLATING) |
| ③ | ネイル NAIL | りん青銅<br>PHOSPHOR BRONZE<br>錫メッキ：1.0μmMIN.<br>TIN<br>ニッケルメッキ（下地）：1.0μmMIN.<br>NICKEL(UNDER PLATING) |
| ④ | カバーテープ COVER TAPE | ポリイミドテープ<br>POLYIMIDE TAPE |

NOTES.

1. 嵌合相手：501330-****
   MATE WITH : 501330-****
2. ソルダーピン及びネイル平坦度は、0.1MAX.
   SOLDER PIN AND NAIL COPLANARITY TO BE 0.1MAX.
3. △3 極数＝偶数に適用
   APPLY FOR CKT SIZE=EVEN
4. 6~15極については、SD-501331-002を参照下さい。
   REFER TO SD-501331-002 ABOUT 6-15CKT.
5. ELV及びRoHS適合品.
   ELV AND RoHS COMPLIANT.

※対応可能な極数は、別途お問い合わせ下さい.

| B | A | MATERIAL NO. | CKT. | MODEL NO. |
|---|---|---|---|---|
| 4.0 | 7.0 | 501331-0509 | 5 | 501331-**09 |
| 3.0 | 6.0 | 501331-0409 | 4 | |
| 2.0 | 5.0 | 501331-0309 | 3 | |
| 1.0 | 4.0 | 501331-0209 | 2 | |

REVISED
EC NO: J2007-2540 2007/03/13
DRWN:YAOYAGI 2007/03/13
CHKD:YMAEDA 2007/03/16
APPR:NUKITA
DESCRIPTION
REV D

GENERAL TOLERANCES (UNLESS SPECIFIED)

| | |
|---|---|
| 10 UNDER | ±0.2 |
| 10 OVER 30 UNDER | ±0.25 |
| 30 OVER | ±0.3 |
| ANGULAR | ±3 ° |

DRAFT WHERE APPLICABLE MUST REMAIN WITHIN DIMENSIONS

DIMENSION STYLE: MM ONLY
SCALE: 10:1
DESIGN UNITS: METRIC
THIRD ANGLE PROJECTION

DRAWN BY: NYOSHIDA DATE: 2004/07/30
CHECKED BY: MYAGI DATE: 2004/07/30
APPROVED BY: MIYAZAWA DATE: 2004/07/30
MATERIAL NO.: SEE TABLE

TITLE: 1.0 WIRE TO BOARD CONN. WAFER ASS'Y (1-ROW S/T) 2-5CKT

molex MOLEX INCORPORATED

DOCUMENT NO.: SD-501331-001
SHEET NO.: 1 OF 1

SIZE A3

THIS DRAWING CONTAINS INFORMATION THAT IS PROPRIETARY TO MOLEX INCORPORATED AND SHOULD NOT BE USED WITHOUT WRITTEN PERMISSION

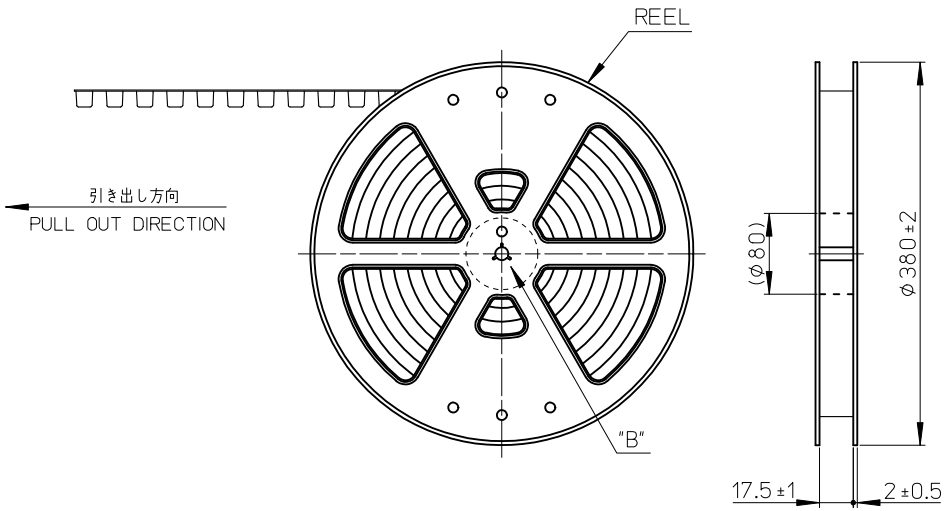


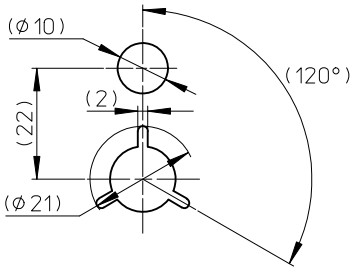


DETAIL "B"

NOTES

1. 製品詳細寸法は製品単体図面を参照して下さい.
   FOR DETAIL OF CONNECTOR DIMENSIONS,PLEASE SEE THE DRAWING OF CONNECTOR ITSELF(NOT PACKAGED).
2. 梱包数量：1100個/リール
   NUMBER OF CONNECTORS : 1100PIECES/REEL
3. リードテープ長さ
   LEAD TAPE LENGTH

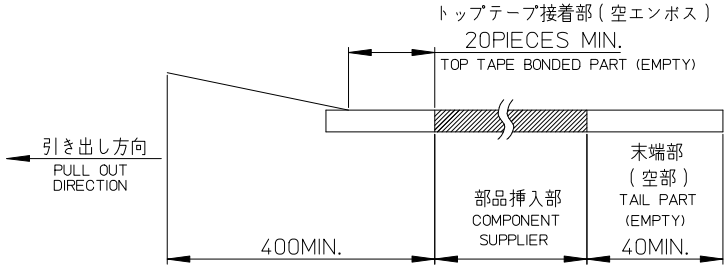


4. 材料
   MATERIAL
   キャリアテープ：ポリプロピレン
   CARRIER TAPE : POLYPROPYLENE
   トップテープ：PET、PE、REF
   TOP TAPE
   リール：ポリスチレン<リサイクル材を含む>
   REEL : POLYSTYRENE <RECYCLE MATERIAL CONTAINED>
5. ELV及びRoHS適合品.
   ELV AND RoHS COMPLIANT.
6. 本製品は乾燥剤入り、ハイバリア梱包仕様である.
   (501331-0607~1507以外)
   THIS PRODUCT IS HIGH BARRIER PACKAGE WITH DESICCANT.
   (BESIDES 501331-0607~1507)

| REVISED | EC NO: | DESCRIPTION | REV |
|---|---|---|---|
| DRWN:NITO | J2010-0951 | | C |
| CH'KD:KASAKAWA | 2010/01/05 | | |
| APPR:NUKITA | 2010/01/06 | | |

GENERAL TOLERANCES (UNLESS SPECIFIED)

| | |
|---|---|
| 10 UNDER | ±0.2 |
| 10 OVER 30 UNDER | ±0.25 |
| 30 OVER | ±0.3 |
| ANGULAR | ±1 ° |

DRAFT WHERE APPLICABLE MUST REMAIN WITHIN DIMENSIONS

| | |
|---|---|
| DIMENSION STYLE | MM ONLY |
| SCALE | --- |
| DESIGN UNITS | METRIC |
| | THIRD ANGLE PROJECTION |
| DRAWN BY | NYOSHIDA |
| DATE | 2005/01/18 |
| CHECKED BY | MYAGI |
| DATE | 2005/01/18 |
| APPROVED BY | ANODA |
| DATE | 2005/01/18 |
| MATERIAL NO. | SEE SHEET 2 |
| TITLE | 1.0 WIRE TO BOARD CONN. WAFER ASS'Y (1-ROW S/T) EMBSTP PKG |
| | MOLEX INCORPORATED |
| DOCUMENT NO. | SD-501331-003 |
| SHEET NO. | 1 OF 2 |
| SIZE | A3 |

THIS DRAWING CONTAINS INFORMATION THAT IS PROPRIETARY TO MOLEX INCORPORATED AND SHOULD NOT BE USED WITHOUT WRITTEN PERMISSION

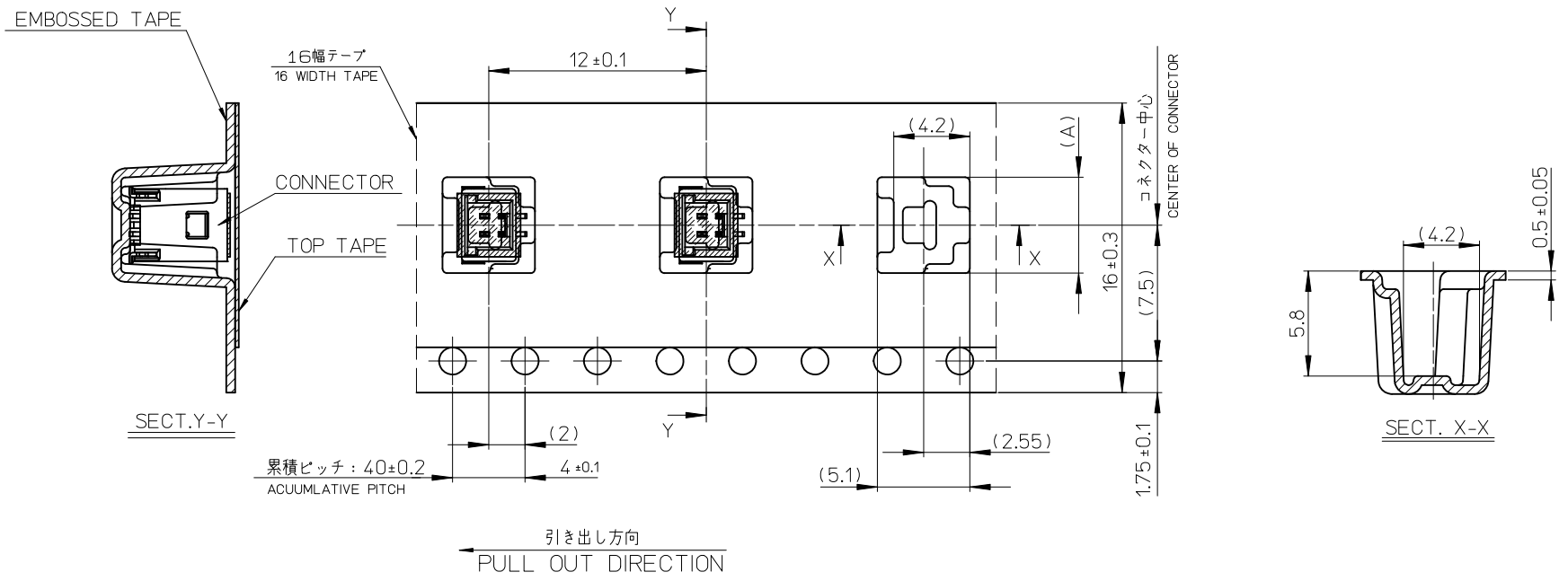


| (A) | CONNECTOR | MATERIAL NO. | CKT. | MODEL NO. |
|---|---|---|---|---|
| 8.3 | 501331-0509 | 501331-0507 | 5 | 501331-***7 |
| 7.3 | 501331-0409 | 501331-0407 | 4 | |
| 6.3 | 501331-0309 | 501331-0307 | 3 | |
| 5.3 | 501331-0209 | 501331-0207 | 2 | |

REVISED
EC NO: J2010-0951
DRWN:NITO 2009/12/16
CH'KD:KASAKAWA 2010/01/05
APPR:NUKITA 2010/01/06
DESCRIPTION
REV
C

GENERAL TOLERANCES (UNLESS SPECIFIED)

| | |
|---|---|
| 10 UNDER | ±0.2 |
| 10 OVER 30 UNDER | ±0.25 |
| 30 OVER | ±0.3 |
| ANGULAR | ±1 ° |

DRAFT WHERE APPLICABLE MUST REMAIN WITHIN DIMENSIONS

DIMENSION STYLE: MM ONLY
SCALE: ---
DESIGN UNITS: METRIC
THIRD ANGLE PROJECTION

DRAWN BY: NYOSHIDA DATE: 2005/01/18
CHECKED BY: MYAGI DATE: 2005/01/18
APPROVED BY: ANODA DATE: 2005/01/18

TITLE: 1.0 WIRE TO BOARD CONN. WAFER ASS'Y (1-ROW S/T) EMBSTP PKG

MOLEX INCORPORATED

MATERIAL NO.: SEE TABLE
DOCUMENT NO.: SD-501331-003
SHEET NO.: 2 OF 2

SIZE A3

THIS DRAWING CONTAINS INFORMATION THAT IS PROPRIETARY TO MOLEX INCORPORATED AND SHOULD NOT BE USED WITHOUT WRITTEN PERMISSION