molex
one company > a world of innovation

This document was generated on 04/19/2010

PLEASE CHECK WWW.MOLEX.COM FOR LATEST PART INFORMATION

Part Number: 5009130302

Status: Active

Description: 0.40mm (.016") Pitch SlimStack™ Board-to-Board Receptacle, Surface Mount, Dual Row, Vertical Stacking, Mated Height of 1.80mm (071"), with Solder Tabs, 30 Circuits, Lead-free

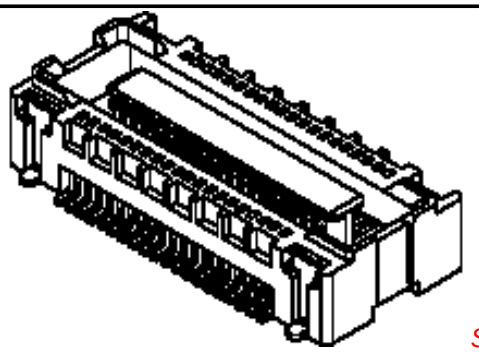

Series image - Reference only

Documents:

3D Model
Drawing (PDF)
Product Specification PS-500913-001 (PDF)
RoHS Certificate of Compliance (PDF)

General

Product Family	PCB Receptacles
Series	500913
Application	Board-to-Board
Comments	Solder Tab Plating: Lead-Fr...
Product Name	SlimStack™

Physical

Circuits (Loaded)	30
Circuits (maximum)	30
Color - Resin	Black
Durability (mating cycles max)	30
Glow-Wire Compliant	No
Lock to Mating Part	Yes
Mated Height (in)	0.071 In
Mated Height (mm)	1.80 mm
Material - Metal	Phosphor Bronze
Material - Plating Mating	Gold
Material - Plating Termination	Gold
Material - Resin	High Temperature Thermoplastic
Number of Rows	2
Orientation	Vertical
PC Tail Length (in)	0.000 In
PC Tail Length (mm)	0.00 mm
PCB Locator	No
PCB Retention	None
PCB Thickness Recommended (in)	0.000 In
PCB Thickness Recommended (mm)	0.00 mm
Packaging Type	Embossed Tape on Reel
Pitch - Mating Interface (in)	0.016 In
Pitch - Mating Interface (mm)	0.40 mm
Pitch - Term. Interface (in)	0.016 In
Pitch - Term. Interface (mm)	0.40 mm
Plating min: Mating (µin)	10
Plating min: Mating (µm)	0.25
Plating min: Termination (µin)	2
Plating min: Termination (µm)	0.05
Polarized to Mating Part	No
Polarized to PCB	No
Stackable	No
Surface Mount Compatible (SMC)	Yes
Temperature Range - Operating	-25°C to +85°C
Termination Interface: Style	Surface Mount

Electrical

Current - Maximum per Contact	0.3A

EU RoHS
ELV and RoHS Compliant
REACH SVHC
Not Reviewed
Halogen-Free Status
Not Reviewed

China RoHS

Need more information on product environmental compliance?

Email productcompliance@molex.com
For a multiple part number RoHS Certificate of Compliance, click here

Please visit the Contact Us section for any non-product compliance questions.

Search Parts in this Series
500913Series

Mates With
55909 PCB Header

Voltage - Maximum	50V AC (RMS)/DC

Material Info

Reference - Drawing Numbers

Product Specification	PS-500913-001, RPS-500913-003, RPS-500913-005
Sales Drawing	SD-500913-001, SD-500913-002

This document was generated on 04/19/2010

PLEASE CHECK WWW.MOLEX.COM FOR LATEST PART INFORMATION

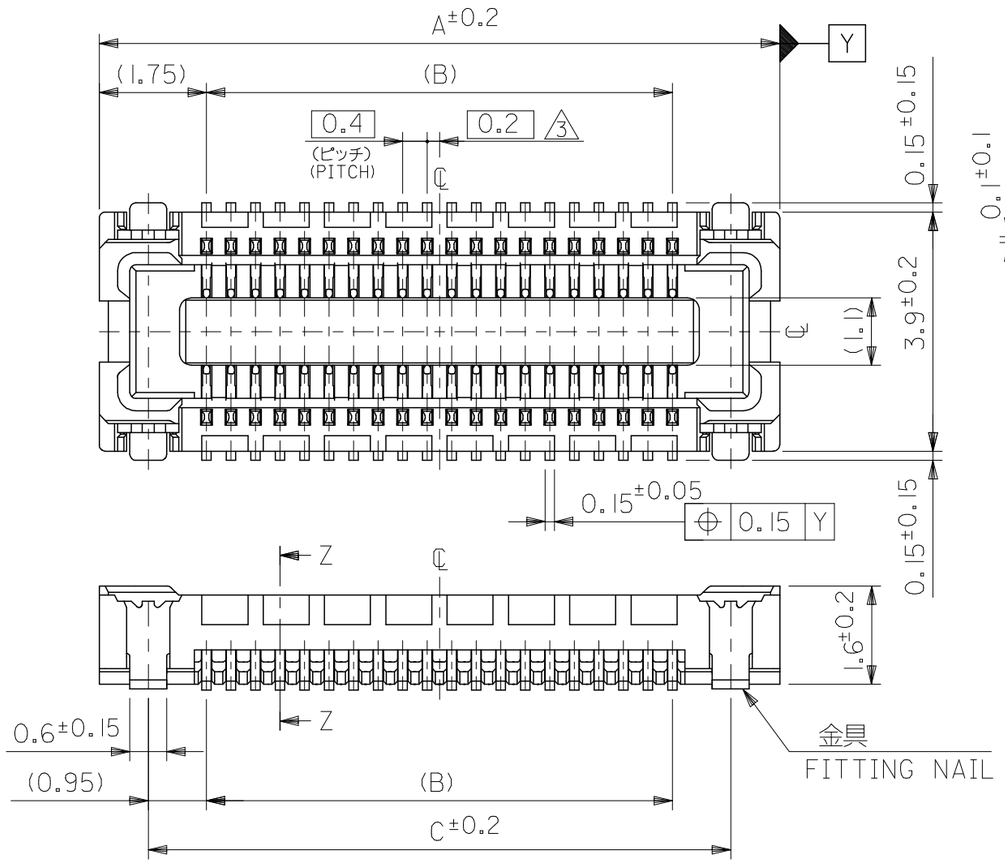

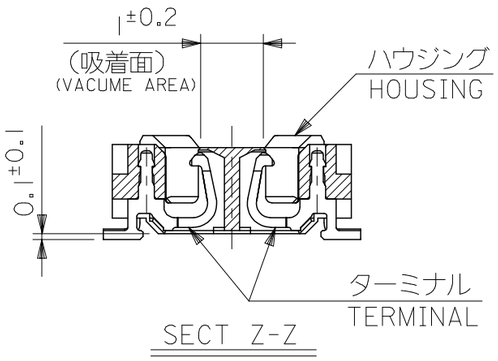

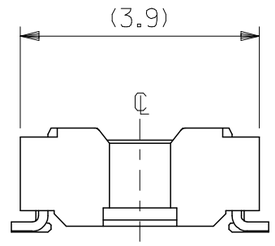

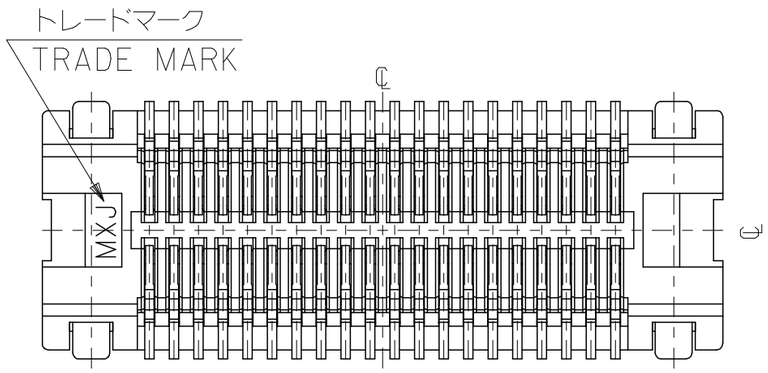

注記 NOTES:

1. 使用材料 MATERIAL
   ハウジング：液晶ポリマー（ＬＣＰ） ガラス充填 ＵＬ９４Ｖ－０（黒）
   HOUSING: LIQUID CRYSTAL POLYMER(GLASS FILLED) UL94V-0 (COLOR:BLACK)
   ターミナル：リン青銅（ｔ＝０．１５）
   TERMINAL: PHOSPHOR BRONZE (t=0.15)
   金具：リン青銅（ｔ＝０．１５）
   FITTING NAIL: PHOSPHOR BRONZE (t=0.15)
2. メッキ仕様 PLATING
   ターミナル TERMINAL
   金メッキ ０．２マイクロメートル以上（コンタクト部）
   GOLD 0.2MICROMETER MINIMUM (CONTACT AREA)
   金メッキ ０．４マイクロメートル以下（テール部）
   GOLD 0.4MICROMETER MAXIMUM (TAIL AREA)
   下地メッキ：ニッケルメッキ １．５マイクロメートル以上
   UNDER PLATING : NICKEL 1.5MICROMETER MINIMUM
   ＊コンタクト部とテール部はニッケルメッキによって分断されている金メッキです。
   DIVIDE INTO PARTS THE GOLD PLATING OF THE CONTACT AND THE TAIL PART BY THE NICKEL PLATING.
   金具 FITTING NAIL
   錫メッキ １．０マイクロメートル以上
   TIN PLATING 1.0MICROMETER MINIMUM
   下地メッキ：ニッケルメッキ １．０マイクロメートル以上
   UNDER PLATING : NICKEL 1.0MICROMETER MINIMUM
3. （全極数／２）＝偶数の場合に適用。
   APPLY FOR (CIRCUIT/2)=EVEN.
4. 嵌合相手：５５９０９シリーズ
   MATE WITH : 55909 SERIES.
5. テール及び金具の平坦度は、０．１以下
   TAIL AND FITTING NAIL COPLANARITY TO BE 0.1MAXIMUM

C	B	A	MATERIAL NO.	CIRCUIT
21.5	19.6	23.1	500913-1008	100
19.5	17.6	21.1	500913-0908	90
15.5	13.6	17.1	500913-0708	70
13.5	11.6	15.1	500913-0608	60
11.5	9.6	13.1	500913-0508	50
9.5	7.6	11.1	500913-0408	40
7.5	5.6	9.1	500913-0308	30
6.3	4.4	7.9	500913-0248	24

REVISED
EC NO: J2007-1419
DRWN:MNABEI 2006/11/16
CH'KD:KTOYODA 2006/11/20
APPR:NUKITA 2006/11/21
DESCRIPTION
REV

GENERAL TOLERANCES (UNLESS SPECIFIED)

10 UNDER	±---
10 OVER 30 UNDER	±---
30 OVER	±---
ANGULAR	±--- °

DRAFT WHERE APPLICABLE MUST REMAIN WITHIN DIMENSIONS

DIMENSION STYLE: MM ONLY
SCALE: 10:1
DESIGN UNITS: METRIC
THIRD ANGLE PROJECTION

DRAWN BY	R.SUMIYA	DATE 2004/04/19
CHECKED BY	M.SASAO	DATE 2004/04/19
APPROVED BY	M.SASAO	DATE 2004/04/19
MATERIAL NO.	SEE CHART	

MODEL NO.: 500913-***8

TITLE: 0.4 B-TO-B CONN REC HSG ASSY (HGT=1.8MM) -LEAD FREE-

MOLEX INCORPORATED

DOCUMENT NO.: SD-500913-001
SHEET NO.: 1 OF 2

SIZE A3

THIS DRAWING CONTAINS INFORMATION THAT IS PROPRIETARY TO MOLEX INCORPORATED AND SHOULD NOT BE USED WITHOUT WRITTEN PERMISSION

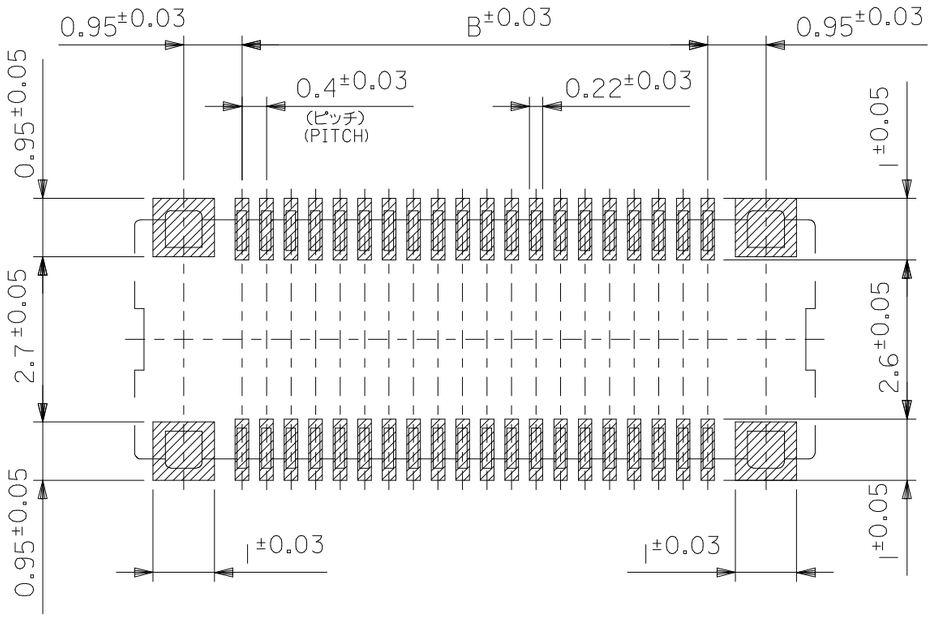

参考基板レイアウト（マウント面）

P.C.BOARD PATTERN DIMENSION. (REFERENCE)
(MOUNTING AREA)

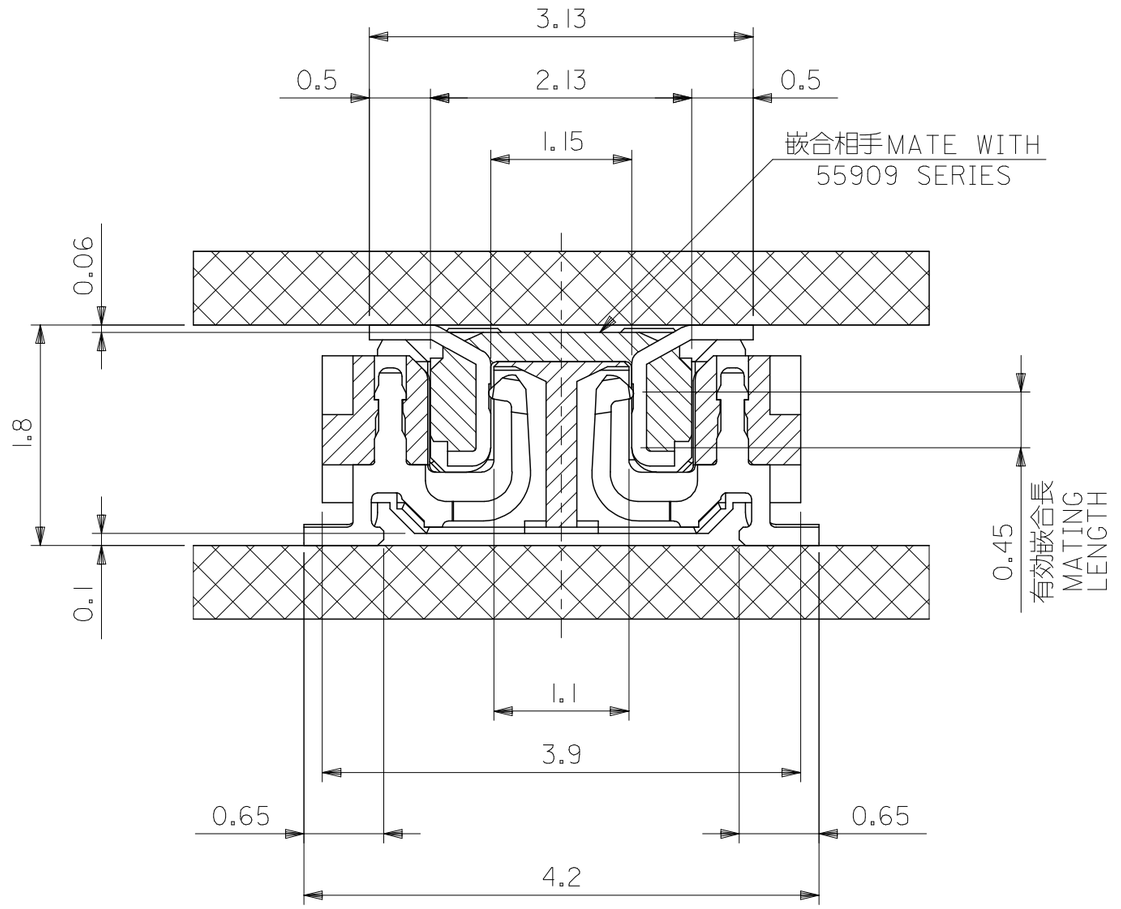

嵌合断面図（参考）

MATED DRAWING (REFERENCE)

REV	DESCRIPTION	
A	REVISED	2006/11/16
	EC NO: J2007-1419	
	DRWN:MNABEI	2006/11/20
	CH'KD:KTOYODA	2006/11/21
	APPR:NUKITA	

GENERAL TOLERANCES (UNLESS SPECIFIED)

10 UNDER	±---
10 OVER 30 UNDER	±---
30 OVER	±---
ANGULAR	±--- °

DRAFT WHERE APPLICABLE MUST REMAIN WITHIN DIMENSIONS

DIMENSION STYLE: MM ONLY

DRAWN BY	R.SUMIYA	DATE 2004/04/19
CHECKED BY	M.SASAO	DATE 2004/04/19
APPROVED BY	M.SASAO	DATE 2004/04/19
MATERIAL NO.	SEE CHART	

500913-×××8 MODEL NO.

SCALE: ---
DESIGN UNITS: METRIC
THIRD ANGLE PROJECTION

TITLE: 0.4 B-TO-B CONN REC HSG ASSY (HGT=1.8MM) -LEAD FREE-

molex MOLEX INCORPORATED

DOCUMENT NO.: SD-500913-001
SHEET NO.: 2 OF 2

SIZE A3

THIS DRAWING CONTAINS INFORMATION THAT IS PROPRIETARY TO MOLEX INCORPORATED AND SHOULD NOT BE USED WITHOUT WRITTEN PERMISSION

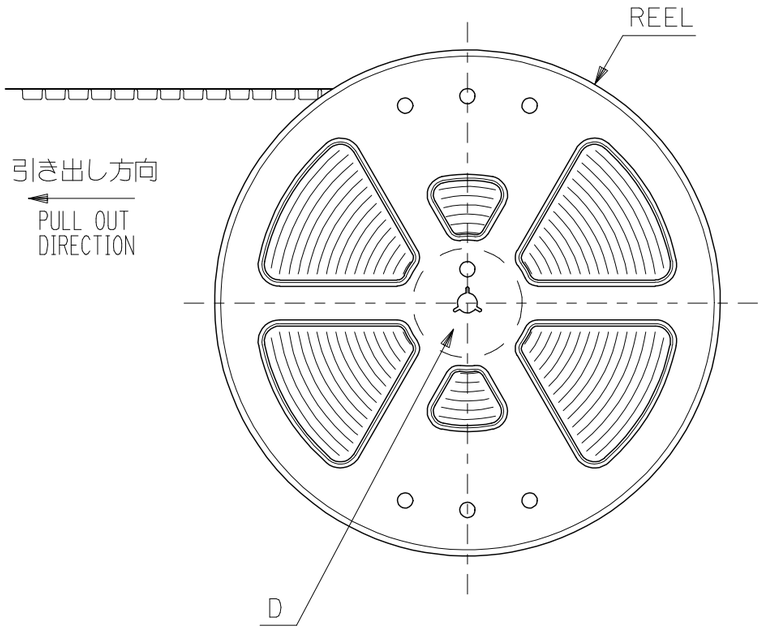

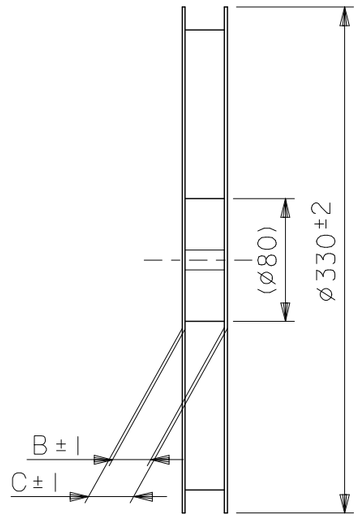

NOTES

1. 製品詳細寸法については製品単体図面SD-500913-001を参照下さい。
   RE DETAILED DIMENSION, SEE PRODUCT DRAWING NO. SD-500913-001.
2. 梱包数量：１５００個／リール
   NUMBER OF CONNECTORS : 1500PCS/REEL
3. リードテープ長さ LEAD TAPE LENGTH

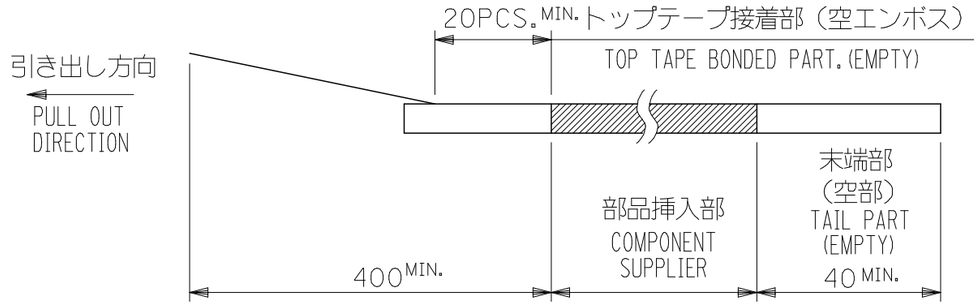

4. 材料 MATERIAL
   キャリアテープ（CARRIER TAPE）：ポリプロピレン（POLYPROPYLENE）
   トップテープ（TOPTAPE）： PET ，PE ，PEF
   リール（REEL）： ポリスチレン（ＰＳ） <リサイクル材を含む>
   POLYSTYRENE (PS) <RECYCLE MATERIAL CONTAINED>

DETAIL D

REVISED	
EC NO: J2007-1419	2006/11/16
DRWN:MNABEI	2006/11/20
CH'KD:KTOYODA	2006/11/21
APPR:NUKITA	
DESCRIPTION	
REV	

GENERAL TOLERANCES (UNLESS SPECIFIED)

10 UNDER	±---
10 OVER 30 UNDER	±---
30 OVER	±---
ANGULAR	±--- °

DRAFT WHERE APPLICABLE MUST REMAIN WITHIN DIMENSIONS

DIMENSION STYLE	MM ONLY
DRAWN BY / DATE	R.SUMIYA 2004/04/19
CHECKED BY / DATE	M.SASAO 2004/04/19
APPROVED BY / DATE	M.SASAO 2004/04/19
MATERIAL NO.	SEE CHART
SIZE	A3

500913-***2		MODEL NO.
SCALE ---	DESIGN UNITS METRIC	THIRD ANGLE PROJECTION

TITLE: 0.4 B-TO-B REC HSG ASSY (HGT=1.8) EMBSTP PKG -LEAD FREE-

molex MOLEX INCORPORATED

DOCUMENT NO. SD-500913-002 SHEET NO. 1 OF 4

THIS DRAWING CONTAINS INFORMATION THAT IS PROPRIETARY TO MOLEX INCORPORATED AND SHOULD NOT BE USED WITHOUT WRITTEN PERMISSION

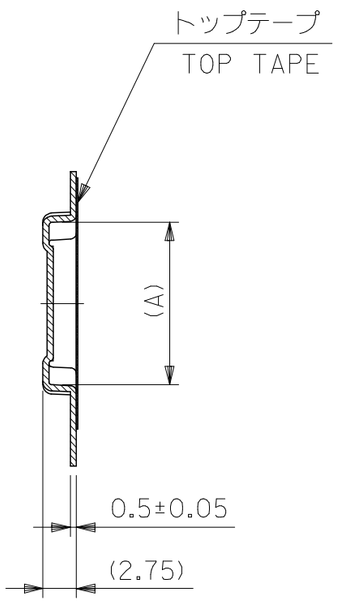

SECT Y-Y

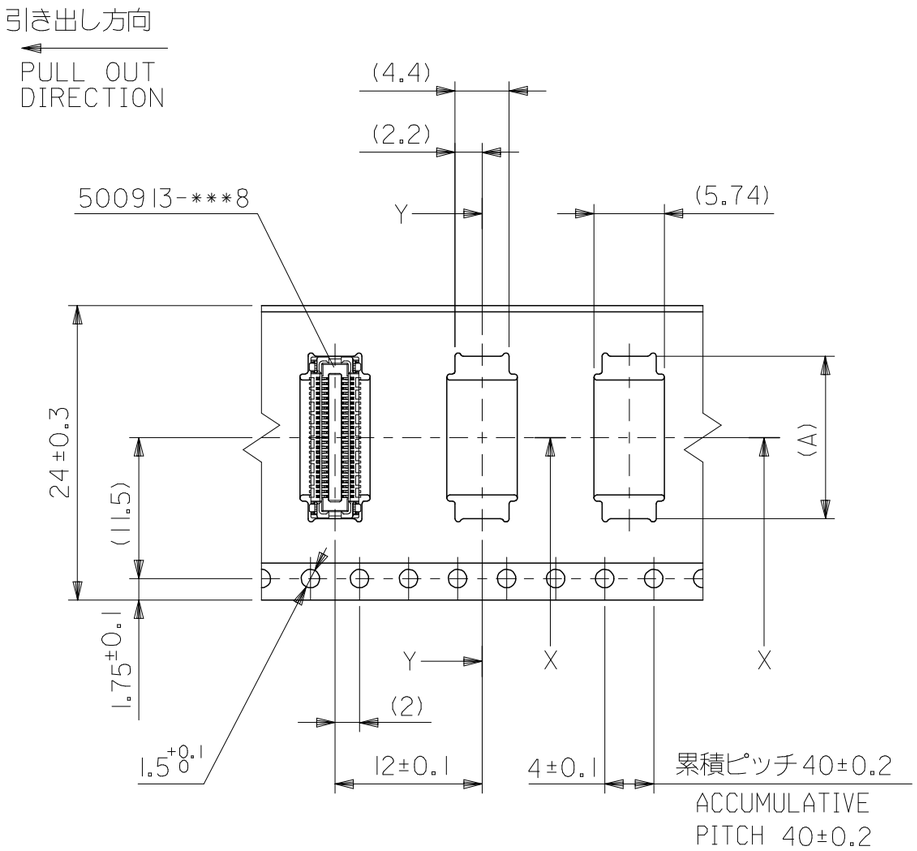

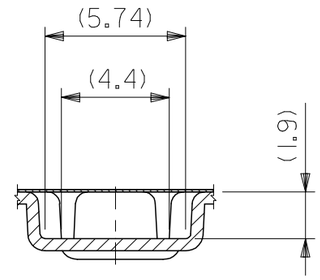

SECT X-X
(SCALE 4:1)

24mm幅キャリアテープ
24mm WIDTH CARRIER TAPE

キャリアテープ幅 CARRIER TAPE WIDTH	C	B	(A)	MATERIAL NO.	CIRCUIT
24	29.4	25.4	15.26	500913-0602	60
			13.26	500913-0502	50
			11.26	500913-0402	40
			9.26	500913-0302	30
			8.06	500913-0242	24

500913-***2 MODEL NO.

REVISED
EC NO: J2007-1419 2006/11/16
DRWN:MNABEI 2006/11/20
CH'KD:KTOYODA
APPR:NUKITA 2006/11/21
REV: E
DESCRIPTION

GENERAL TOLERANCES (UNLESS SPECIFIED)

10 UNDER	±---
10 OVER 30 UNDER	±---
30 OVER	±---
ANGULAR	±--- °

DRAFT WHERE APPLICABLE MUST REMAIN WITHIN DIMENSIONS

DIMENSION STYLE: MM ONLY
SCALE: 2:1
DESIGN UNITS: METRIC
THIRD ANGLE PROJECTION

DRAWN BY	R.SUMIYA	DATE 2004/04/19
CHECKED BY	M.SASAO	DATE 2004/04/19
APPROVED BY	M.SASAO	DATE 2004/04/19

TITLE: 0.4 B-TO-B REC HSG ASSY (HGT=1.8) EMBSTP PKG -LEAD FREE-

molex MOLEX INCORPORATED

MATERIAL NO.: SEE CHART
DOCUMENT NO.: SD-500913-002
SHEET NO.: 2 OF 4
SIZE: A3

THIS DRAWING CONTAINS INFORMATION THAT IS PROPRIETARY TO MOLEX INCORPORATED AND SHOULD NOT BE USED WITHOUT WRITTEN PERMISSION

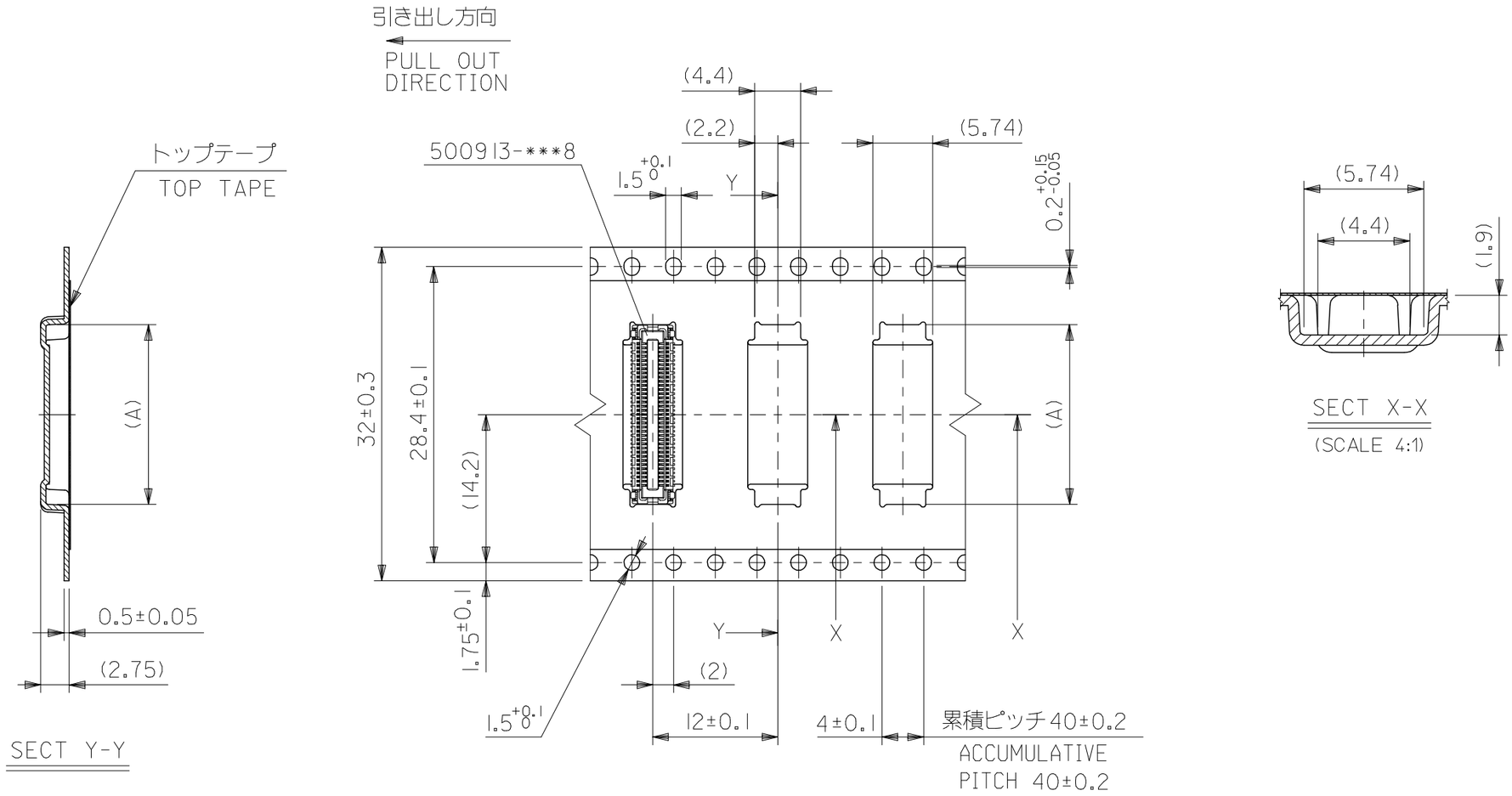

32mm幅キャリアテープ

32mm WIDTH CARRIER TAPE

32	41.4	37.4	21.26	500913-0902	90
	37.4	33.4	17.26	500913-0702	70
キャリアテープ幅 CARRIER TAPE WIDTH	C	B	(A)	MATERIAL NO.	CIRCUIT

500913-***2 | MODEL NO.

REVISED
EC NO: J2007-1419 2006/11/16
DRWN:MNABEI 2006/11/20
CH'KD:KTOYODA
APPR:NUKITA 2006/11/21

DESCRIPTION | REV

GENERAL TOLERANCES (UNLESS SPECIFIED)

10 UNDER	±---
10 OVER 30 UNDER	±---
30 OVER	±---
ANGULAR	±--- °

DRAFT WHERE APPLICABLE MUST REMAIN WITHIN DIMENSIONS

DIMENSION STYLE: MM ONLY
SCALE: 2:1
DESIGN UNITS: METRIC
THIRD ANGLE PROJECTION

DRAWN BY: R.SUMIYA DATE: 2004/04/19
CHECKED BY: M.SASAO DATE: 2004/04/19
APPROVED BY: M.SASAO DATE: 2004/04/19

TITLE: 0.4 B-TO-B REC HSG ASSY (HGT=1.8) EMBSTP PKG -LEAD FREE-

molex MOLEX INCORPORATED

MATERIAL NO.: SEE CHART
DOCUMENT NO.: SD-500913-002
SHEET NO.: 3 OF 4

SIZE A3

THIS DRAWING CONTAINS INFORMATION THAT IS PROPRIETARY TO MOLEX INCORPORATED AND SHOULD NOT BE USED WITHOUT WRITTEN PERMISSION

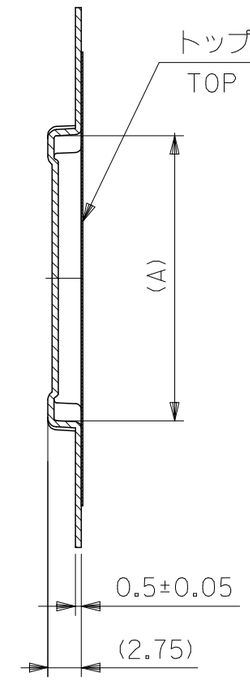

SECT Y-Y

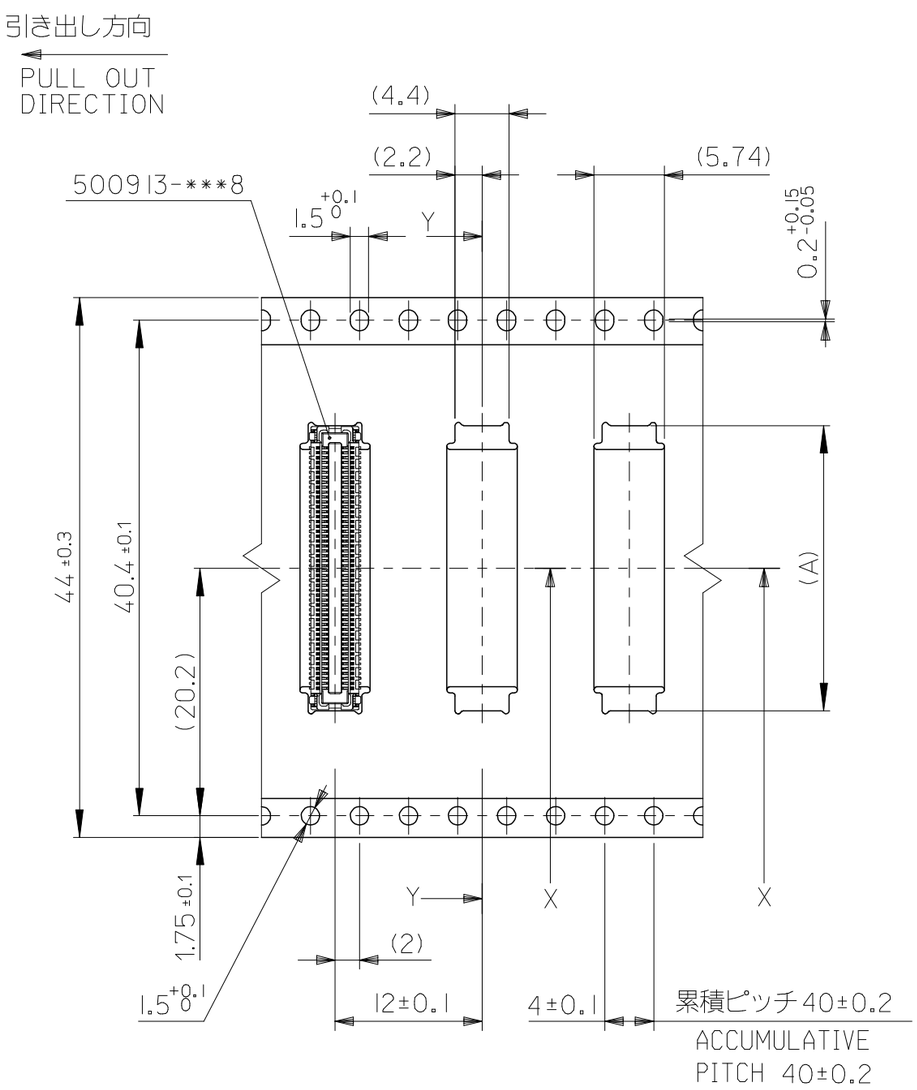

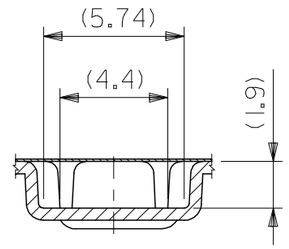

SECT X-X
(SCALE 4:1)

44 mm幅キャリアテープ

44 mm WIDTH CARRIER TAPE

44	49.4	45.4	23.26	500913-1002	100
キャリアテープ幅 CARRIER TAPE WIDTH	C	B	(A)	MATERIAL NO.	CIRCUIT

500913-***2	MODEL NO.

REVISED
EC NO: J2007-1419 2006/11/16
DRWN:MNABEI 2006/11/20
CH'KD:KTOYODA
APPR:NUKITA 2006/11/21

REV	DESCRIPTION
E	

GENERAL TOLERANCES (UNLESS SPECIFIED)

10 UNDER	±---
10 OVER 30 UNDER	±---
30 OVER	±---
ANGULAR	±--- °

DRAFT WHERE APPLICABLE MUST REMAIN WITHIN DIMENSIONS

DIMENSION STYLE	SCALE	DESIGN UNITS	
MM ONLY	2:1	METRIC	THIRD ANGLE PROJECTION

DRAWN BY	Y.SAKIYA	DATE 2004/07/30
CHECKED BY	M.SASAO	DATE 2004/07/30
APPROVED BY	M.SASAO	DATE 2004/07/30

TITLE
0.4 B-TO-B REC HSG ASSY
(HGT=1.8) EMBSTP PKG
-LEAD FREE-

molex MOLEX INCORPORATED

MATERIAL NO.	DOCUMENT NO.	SHEET NO.
SEE CHART	SD-500913-002	4 OF 4

SIZE A3

THIS DRAWING CONTAINS INFORMATION THAT IS PROPRIETARY TO MOLEX INCORPORATED AND SHOULD NOT BE USED WITHOUT WRITTEN PERMISSION