Part Number: 5005920500
Status: Active
Description: 2.50mm (.098") Pitch Wire-to-Wire and Wire-to-Board Housing, Positive Lock, 5 Circuits

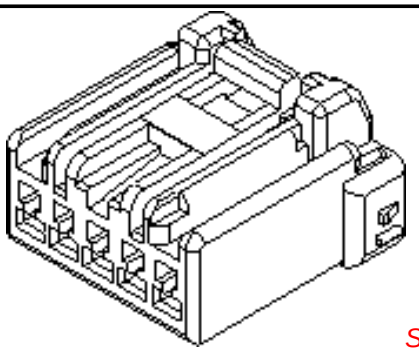

Series image - Reference only

Documents:

3D Model
Drawing (PDF)
Product Specification PS-500592-001 (PDF)
RoHS Certificate of Compliance (PDF)

General

Product Family	Crimp Housings
Series	500592
Product Name	N/A

Physical

Circuits (maximum)	5
Color - Resin	Natural
Gender	Female
Glow-Wire Compliant	No
Material - Resin	Polyester
Number of Rows	1
Packaging Type	Bag
Panel Mount	No
Pitch - Mating Interface (in)	0.098 In
Pitch - Mating Interface (mm)	2.50 mm
Temperature Range - Operating	-40°C to +85°C

Material Info

Reference - Drawing Numbers

Product Specification	PS-500592-001, RPS-500592-001, RPS-500592-002, RPS-500592-003, RPS-500592-004
Sales Drawing	SD-500592-001

EU RoHS
ELV and RoHS Compliant
REACH SVHC
Contains SVHC: No
Halogen-Free Status
Not Reviewed

China RoHS

Need more information on product environmental compliance?

Email productcompliance@molex.com
For a multiple part number RoHS Certificate of Compliance, click here

Please visit the Contact Us section for any non-product compliance questions.

Search Parts in this Series
500592Series

Mates With
500593

Use With
50397 , 500817

SHAPE OF
500592-050*

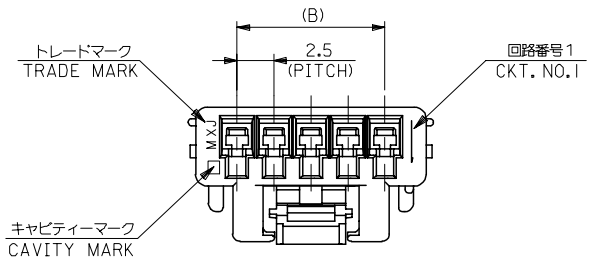

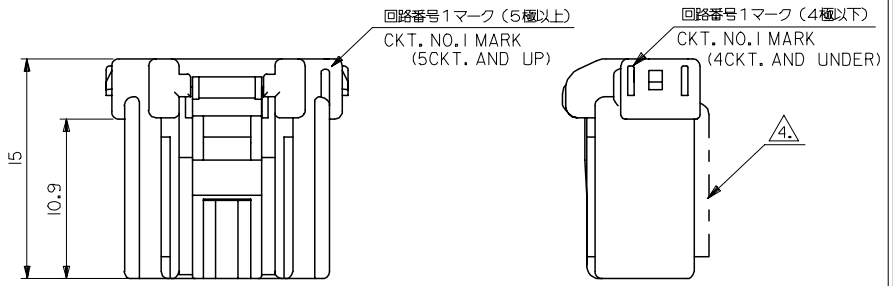

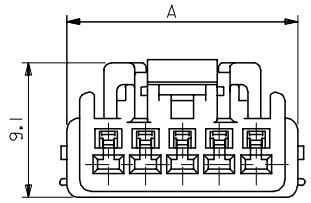

4極以下での極数レイアウト図
LAYOUT OF 2/3/4CKTS.

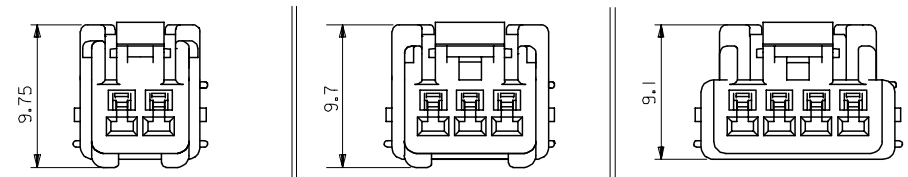

2CKTS
500592-020*

3CKTS
500592-030*

4CKTS
500592-040*

ターミナル装着状態図
TERMINAL ASSEMBLY DRAWING

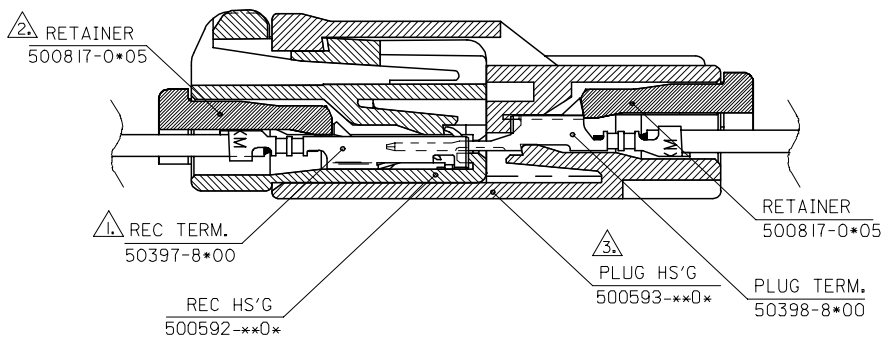

注記
NOTES

1. 適合ターミナル：50397シリーズ
APPLICABLE TERMINAL : 50397 SERIES

2. 適合リテーナー：500817シリーズ
APPLICABLE RETAINER : 500817 SERIES

3. 嵌合相手 ： 500593シリーズ
MATE WITH : 500593 SERIES

4. 2及び3極に適用。
APPLY 2&3 CIRCUITS.

5. 材質 :PBT (UL94V-0)
MATERIAL :PBT(UL94V-0)

6. MATERIAL NO. は以下の内容を示す.
MATERIAL NO. :
500592-**0*

極数 CKT

色 COLOR
0:自然色 NATURAL
1:黒 BLACK
2:赤 RED
3:黄色 YELLOW
4:青 BLUE
6:緑 GREEN

500592-**0*	MODEL NO.				
DIMENSION STYLE: MM ONLY	SCALE: ---	DESIGN UNITS: METRIC	THIRD ANGLE PROJECTION		
DRAWN BY: T.ODA	DATE: '04/06/09	TITLE: 2.5MM WIRE TO WIRE CONN RECEPTACLE HOUSING			
CHECKED BY: S.ICHIKAWA	DATE: '04/06/09				
APPROVED BY: Y.ITO	DATE: '04/06/09	molex MOLEX INCORPORATED			
MATERIAL NO.: SEE CHART	DOCUMENT NO.: SD-500592-001	SHEET NO.: 1 OF 2			
SIZE: A3	THIS DRAWING CONTAINS INFORMATION THAT IS PROPRIETARY TO MOLEX INCORPORATED AND SHOULD NOT BE USED WITHOUT WRITTEN PERMISSION				

GENERAL TOLERANCES (UNLESS SPECIFIED)

10 UNDER	±0.2
10 OVER 30 UNDER	±0.25
30 OVER	±0.3
ANGULAR	±3 °

DRAFT WHERE APPLICABLE MUST REMAIN WITHIN DIMENSIONS

REVISED
EC NO: J2006-1361
DRWN:MNABEI 2005/10/27
CH'KD:KTOYODA 2005/10/27
APPR:NUKITA 2005/11/01
REV: A
DESCRIPTION

tb_frame_A3_J_ME_S
Rev. D 2004/04/02

EN-02JA(021)

500593-080*	500817-0805	17.5	23.1	8	500592-0806	500592-0804	500592-0803	500592-0802		500592-0800	500592-**0*
-070*	-0705	15	20.6	7	-0706	-0704	-0703	-0702		-0700	
-060*	-0605	12.5	18.1	6	-0606	-0604	-0603	-0602		-0600	
-050*	-0505	10	15.6	5	-0506	-0504	-0503	-0502		-0500	
-040*	-0405	7.5	13.1	4	-0406	-0404	-0403	-0402		-0400	
-030*	-0305	5	10.6	3	-0306	-0304	-0303	-0302		-0300	
500593-020*	500817-0205	2.5	8.1	2	500592-0206	500592-0204	500592-0203	500592-0202	500592-0201	500592-0200	
MATE WITH	CONFORTABLE-RETAINER	B	A	CKT.	GREEN	BLUE	YELLOW	RED	BLACK	NATURAL	MODEL NO.
					MATERIAL NO.						

REVISED
EC NO: J2006-1361 2005/10/27
DRWN:MNABEI 2005/10/27
CHKD:KTOYODA 2005/11/01
APPR:NUKITA
DESCRIPTION
REV
A

GENERAL TOLERANCES (UNLESS SPECIFIED)

10 UNDER	±0.2
10 OVER 30 UNDER	±0.25
30 OVER	±0.3
ANGULAR ±3 °	

DRAFT WHERE APPLICABLE MUST REMAIN WITHIN DIMENSIONS

DIMENSION STYLE: MM ONLY
SCALE: ---
DESIGN UNITS: METRIC
THIRD ANGLE PROJECTION

DRAWN BY: T.ODA DATE: '04/06/09
CHECKED BY: S.ICHIKAWA DATE: '04/06/09
APPROVED BY: Y.ITO DATE: '04/06/09

TITLE: 2.5MM WIRE TO WIRE CONN RECEPTACLE HOUSING

molex MOLEX INCORPORATED

MATERIAL NO.: SEE CHART
DOCUMENT NO.: SD-500592-001
SHEET NO.: 2 OF 2

SIZE: A3

THIS DRAWING CONTAINS INFORMATION THAT IS PROPRIETARY TO MOLEX INCORPORATED AND SHOULD NOT BE USED WITHOUT WRITTEN PERMISSION