THIS DRAWING IS UNPUBLISHED. RELEASED FOR PUBLICATION 20
© COPYRIGHT 20 BY - ALL RIGHTS RESERVED.

REVISIONS

P	LTR	DESCRIPTION	DATE	DWN	APVD
	A	RELEASE	31OCT2016	JY	SH

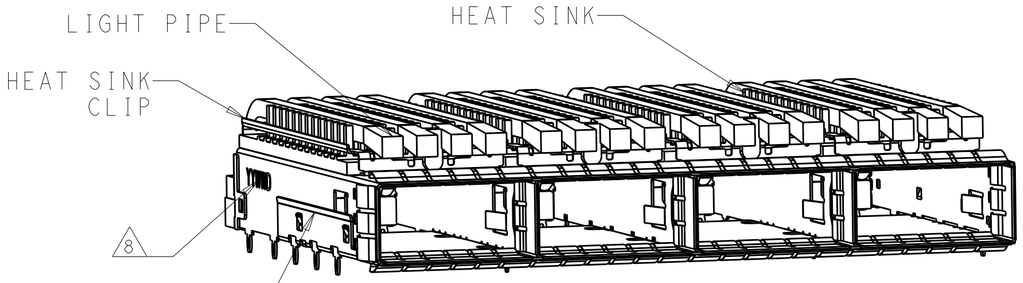

2170790-1, 5-2170790-1 AS SHOWN
SCALE 2:1

1. COMPONENTS
   CAGE ASSEMBLY: NICKEL-SILVER ALLOY
   HEAT SINK: ALUMINUM/BLACK ANODIZE
   HEAT SINK CLIP: STAINLESS STEEL
   EMI SPRING: COPPER ALLOY/NICKEL PLATE
   LIGHT PIPE: CLEAR POLYCARBONATE WITH UL 94 V_0
   ORGANIZER: POLYESTER WITH UL 94 V_0

2. REFERENCE APPLICATION SPECIFICATION 114-32023 FOR RECOMMENDED DRILL HOLE DIAMETER AND PLATING THICKNESS

3. DATUM AND BASIC DIMENSION ESTABLISHED BY CUSTOMER

4. DIMENSION APPLIES WITH MODULE INSERTED IN CAGE

5. HEAT SINKS, HEAT SINK CLIPS AND LIGHT PIPES ARE SHIPPED ASSEMBLED ON CAGE

6. MINIMUM PC BOARD THICKNESS: SINGLE SIDED: 1.57 MIN
   DOUBLE SIDED: 2.20 MIN

7. MATES WITH QSFP28 MSA COMPATIBLE TRANSCEIVER.

8. DATE CODE (YYWWD) MARKED APPROXIMATELY AS SHOWN.

9. THESE SPEC ARE OPTIONAL WHEN THE LIGHT PIPES ARE REMOVED.

DETAIL C
SCALE 6:1

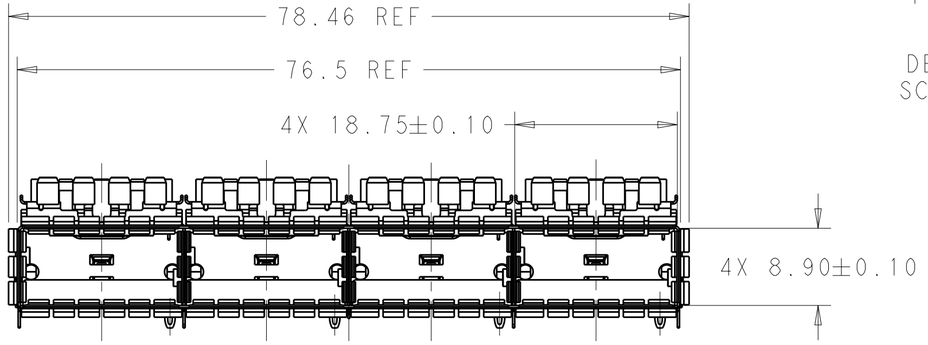

SCALE 2:1

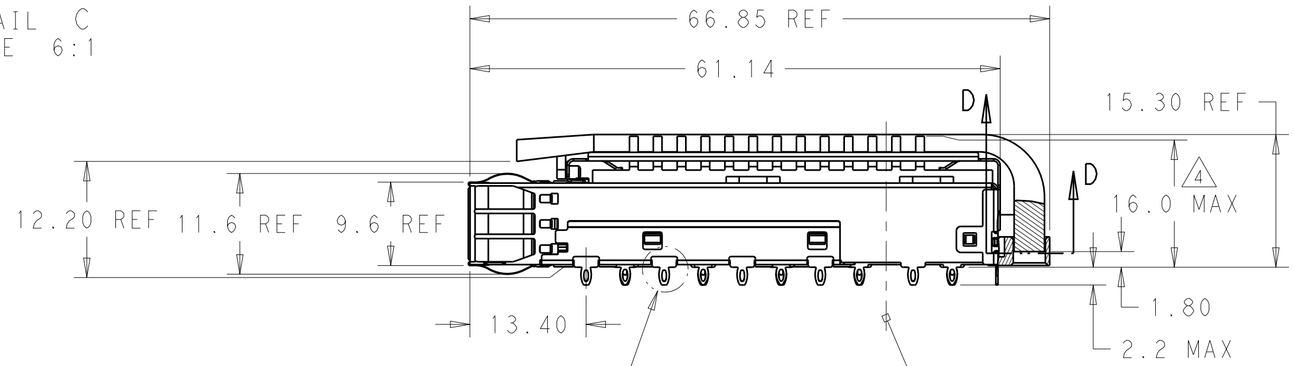

SECTION A-A

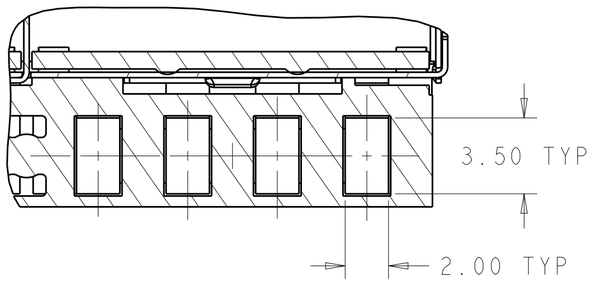

SURFACE OF LIGHT INPUT
SECTION D-D
SCALE 5:1

LP OPTION	HS OPTION	PART NUMBER
W/ COATING	CUSTOMERIZED HS	5-2170790-5
W/ COATING	CUSTOMERIZED HS	5-2170790-4
W/ COATING	CUSTOMERIZED HS	5-2170790-3
W/ COATING	CUSTOMERIZED HS	5-2170790-2
W/ COATING	SAN HS	5-2170790-1
N/A	CUSTOMERIZED HS	2170790-6
W/O COATING	CUSTOMERIZED HS	2170790-5
W/O COATING	CUSTOMERIZED HS	2170790-4
W/O COATING	CUSTOMERIZED HS	2170790-3
W/O COATING	CUSTOMERIZED HS	2170790-2
W/O COATING	SAN HS	2170790-1

THIS DRAWING IS A CONTROLLED DOCUMENT.

DIMENSIONS: mm

TOLERANCES UNLESS OTHERWISE SPECIFIED:
0 PLC ±-
1 PLC ±0.25
2 PLC ±0.2
3 PLC ±-
4 PLC ±-
ANGLES ±-

MATERIAL: SEE NOTES -
FINISH: SEE NOTES -

DWN JASON YANG 30JUN2014
CHK SEAN HAN 19FEB2016
APVD -
PRODUCT SPEC 108-19428
APPLICATION SPEC 114-32023
WEIGHT -
CUSTOMER DRAWING

TE Connectivity

NAME: CAGE ASSEMLBY, QSFP28, 1X4 WITH HEAT SINKS AND LIGHT PIPES, THRU BEZEL, SPRING

SIZE A2 | CAGE CODE 00779 | DRAWING NO C-2170790 | RESTRICTED TO -

SCALE 3:1 | SHEET 1 OF 10 | REV A

THIS DRAWING IS UNPUBLISHED. RELEASED FOR PUBLICATION 20
© COPYRIGHT 20 BY - ALL RIGHTS RESERVED.

REVISIONS

P	LTR	DESCRIPTION	DATE	DWN	APVD
	-	SEE SHEET 1	-	-	-

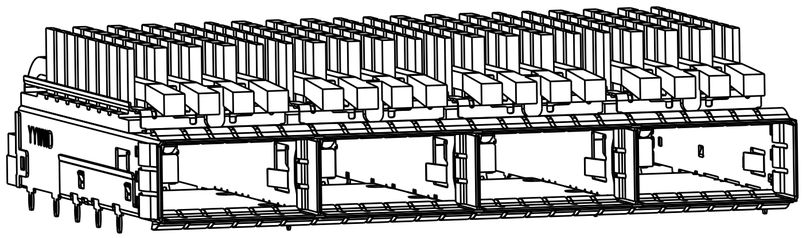

2170790-2, 5-2170790-2 AS SHOWN
CUSTOMERIZED HEAT SINK
SCALE 2:1

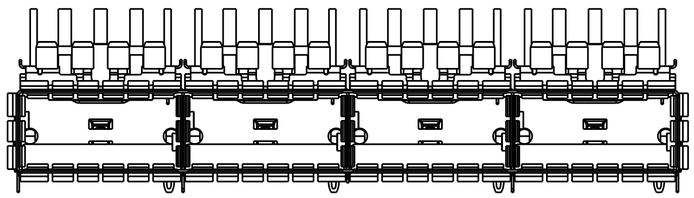

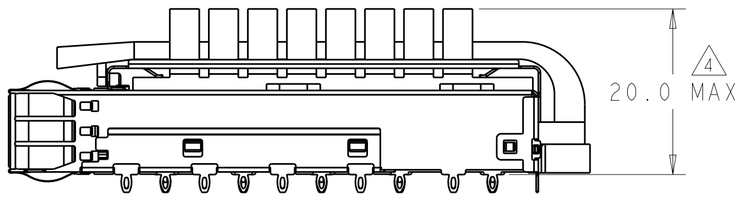

2170790-2, 5-2170790-2
UNSPECIFIED DIMENSIONS ARE SAME AS 2170790-1
SCALE 2:1

THIS DRAWING IS A CONTROLLED DOCUMENT.

DIMENSIONS: mm

TOLERANCES UNLESS OTHERWISE SPECIFIED:
0 PLC ±-
1 PLC ±0.25
2 PLC ±0.2
3 PLC ±-
4 PLC ±-
ANGLES ±-

MATERIAL: SEE NOTES -
FINISH: SEE NOTES -

DWN JASON YANG 30JUN2014
CHK SEAN HAN 19FEB2016
APVD -
PRODUCT SPEC 108-19428
APPLICATION SPEC 114-32023
WEIGHT -

TE Connectivity

NAME: CAGE ASSEMLBY, QSFP28, 1X4 WITH HEAT SINKS AND LIGHT PIPES, THRU BEZEL, SPRING

SIZE	CAGE CODE	DRAWING NO	RESTRICTED TO
A2	00779	C-2170790	-

CUSTOMER DRAWING | SCALE 3:1 | SHEET 2 OF 10 | REV A

THIS DRAWING IS UNPUBLISHED. RELEASED FOR PUBLICATION 20
© COPYRIGHT 20 BY - ALL RIGHTS RESERVED.

REVISIONS

P	LTR	DESCRIPTION	DATE	DWN	APVD
	-	SEE SHEET 1	-	-	-

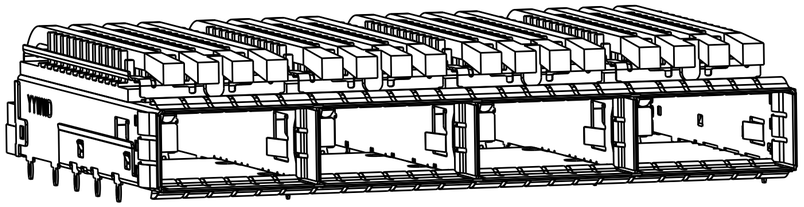

2170790-3, 5-2170790-3 AS SHOWN
CUSTOMERIZED HEAT SINK
SCALE 2:1

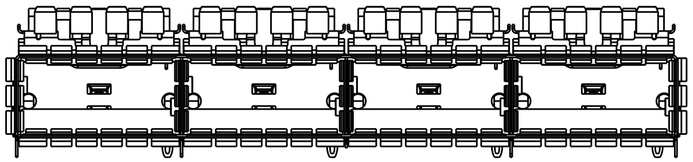

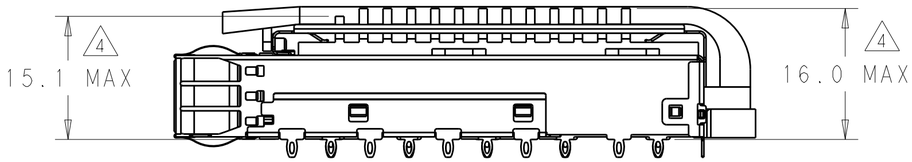

2170790-3, 5-2170790-3
UNSPECIFIED DIMENSIONS ARE SAME AS 2170790-1
SCALE 2:1

THIS DRAWING IS A CONTROLLED DOCUMENT.

DIMENSIONS: mm

TOLERANCES UNLESS OTHERWISE SPECIFIED:
0 PLC ±-
1 PLC ±0.25
2 PLC ±0.2
3 PLC ±-
4 PLC ±-
ANGLES ±-

MATERIAL: SEE NOTES -
FINISH: SEE NOTES -

DWN JASON YANG 30JUN2014
CHK SEAN HAN 19FEB2016
APVD -
PRODUCT SPEC 108-19428
APPLICATION SPEC 114-32023
WEIGHT -

TE Connectivity

NAME: CAGE ASSEMLBY, QSFP28, 1X4 WITH HEAT SINKS AND LIGHT PIPES, THRU BEZEL, SPRING

SIZE	CAGE CODE	DRAWING NO	RESTRICTED TO
A2	00779	C-2170790	-

CUSTOMER DRAWING | SCALE 3:1 | SHEET 3 OF 10 | REV A

1471-9 (3/13)

THIS DRAWING IS UNPUBLISHED. RELEASED FOR PUBLICATION 20
© COPYRIGHT 20 BY - ALL RIGHTS RESERVED.

REVISIONS

P	LTR	DESCRIPTION	DATE	DWN	APVD
	-	SEE SHEET 1	-	-	-

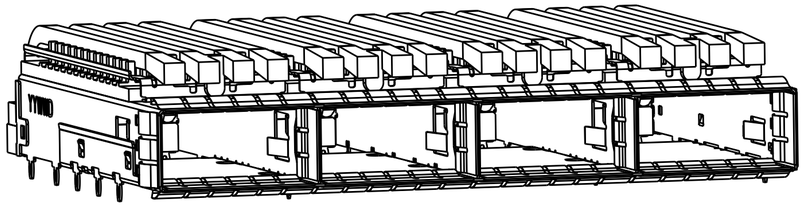

2170790-4, 5-2170790-4 AS SHOWN
CUSTOMERIZED HEAT SINK
SCALE 2:1

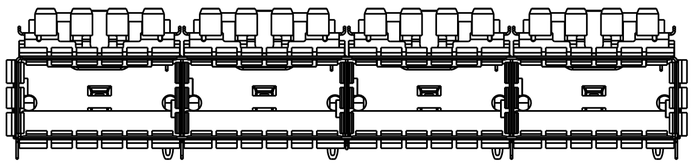

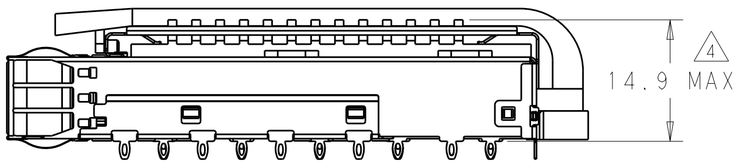

2170790-4, 5-2170790-4
UNSPECIFIED DIMENSIONS ARE SAME AS 2170790-1
SCALE 2:1

THIS DRAWING IS A CONTROLLED DOCUMENT.

DIMENSIONS: mm

TOLERANCES UNLESS OTHERWISE SPECIFIED:
0 PLC ±-
1 PLC ±0.25
2 PLC ±0.2
3 PLC ±-
4 PLC ±-
ANGLES ±-

MATERIAL SEE NOTES -
FINISH SEE NOTES -

DWN JASON YANG 30JUN2014
CHK SEAN HAN 19FEB2016
APVD -
PRODUCT SPEC 108-19428
APPLICATION SPEC 114-32023
WEIGHT -

TE Connectivity

NAME CAGE ASSEMLBY, QSFP28, 1X4 WITH HEAT SINKS AND LIGHT PIPES, THRU BEZEL, SPRING

SIZE	CAGE CODE	DRAWING NO	RESTRICTED TO
A2	00779	C-2170790	-

CUSTOMER DRAWING | SCALE 3:1 | SHEET 4 OF 10 | REV A

THIS DRAWING IS UNPUBLISHED. RELEASED FOR PUBLICATION 20
© COPYRIGHT 20 BY - ALL RIGHTS RESERVED.

REVISIONS

P	LTR	DESCRIPTION	DATE	DWN	APVD
	-	SEE SHEET 1	-	-	-

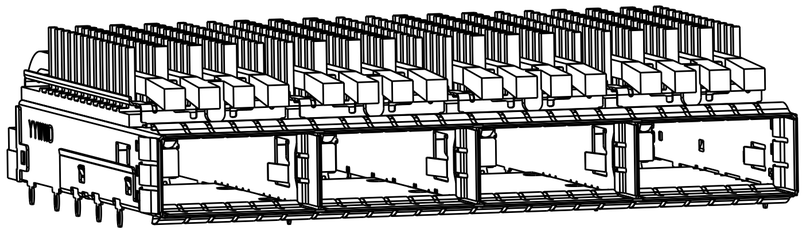

2170790-5, 5-2170790-5 AS SHOWN
CUSTOMERIZED HEAT SINK
SCALE 2:1

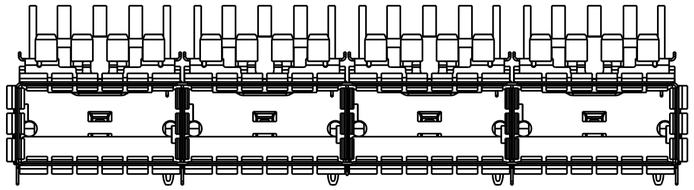

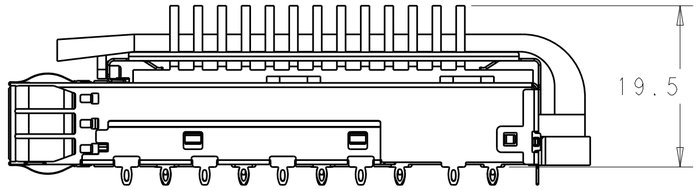

2170790-5, 5-2170790-5
UNSPECIFIED DIMENSIONS ARE SAME AS 2170790-1
SCALE 2:1

THIS DRAWING IS A CONTROLLED DOCUMENT.

DIMENSIONS: mm

TOLERANCES UNLESS OTHERWISE SPECIFIED:
0 PLC ±-
1 PLC ±0.25
2 PLC ±0.2
3 PLC ±-
4 PLC ±-
ANGLES ±-

MATERIAL: SEE NOTES -
FINISH: SEE NOTES -

DWN JASON YANG 30JUN2014
CHK SEAN HAN 19FEB2016
APVD -
PRODUCT SPEC 108-19428
APPLICATION SPEC 114-32023
WEIGHT -

CUSTOMER DRAWING

TE Connectivity

NAME: CAGE ASSEMLBY, QSFP28, 1X4 WITH HEAT SINKS AND LIGHT PIPES, THRU BEZEL, SPRING

SIZE	CAGE CODE	DRAWING NO	RESTRICTED TO
A2	00779	C-2170790	-

SCALE 3:1 SHEET 5 OF 10 REV A

THIS DRAWING IS UNPUBLISHED. RELEASED FOR PUBLICATION 20
© COPYRIGHT 20 BY - ALL RIGHTS RESERVED.

REVISIONS

P	LTR	DESCRIPTION	DATE	DWN	APVD
	-	SEE SHEET 1	-	-	-

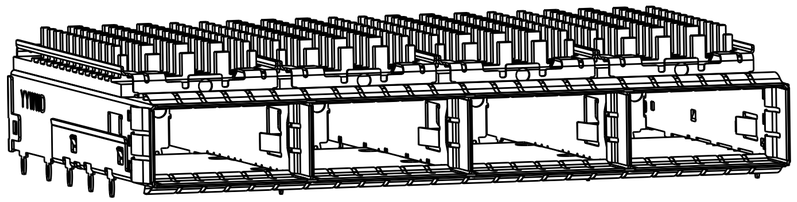

2170790-6 AS SHOWN
CUSTOMERIZED HEAT SINK
NO LIGHT PIPE AND ORGANIZER.
SCALE 2:1

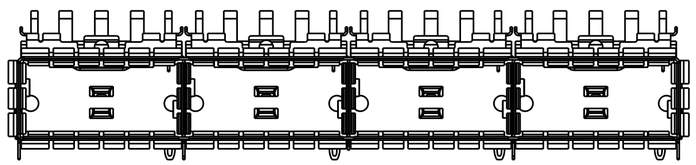

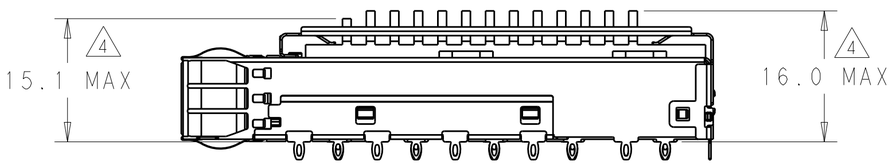

2170790-6
UNSPECIFIED DIMENSIONS ARE SAME AS 2170790-3
SCALE 2:1

THIS DRAWING IS A CONTROLLED DOCUMENT.

DIMENSIONS: mm

TOLERANCES UNLESS OTHERWISE SPECIFIED:
0 PLC ±-
1 PLC ±0.25
2 PLC ±0.2
3 PLC ±-
4 PLC ±-
ANGLES ±-

MATERIAL SEE NOTES -
FINISH SEE NOTES -

DWN JASON YANG 30JUN2014
CHK SEAN HAN 19FEB2016
APVD -
PRODUCT SPEC 108-19428
APPLICATION SPEC 114-32023
WEIGHT -

TE Connectivity

NAME CAGE ASSEMLBY, QSFP28, 1X4 WITH HEAT SINKS AND LIGHT PIPES, THRU BEZEL, SPRING

SIZE	CAGE CODE	DRAWING NO	RESTRICTED TO
A2	00779	C-2170790	-

CUSTOMER DRAWING | SCALE 3:1 | SHEET 6 OF 10 | REV A

THIS DRAWING IS UNPUBLISHED. RELEASED FOR PUBLICATION 20
© COPYRIGHT 20 BY - ALL RIGHTS RESERVED.

REVISIONS

P	LTR	DESCRIPTION	DATE	DWN	APVD
	-	SEE SHEET 1	-	-	-

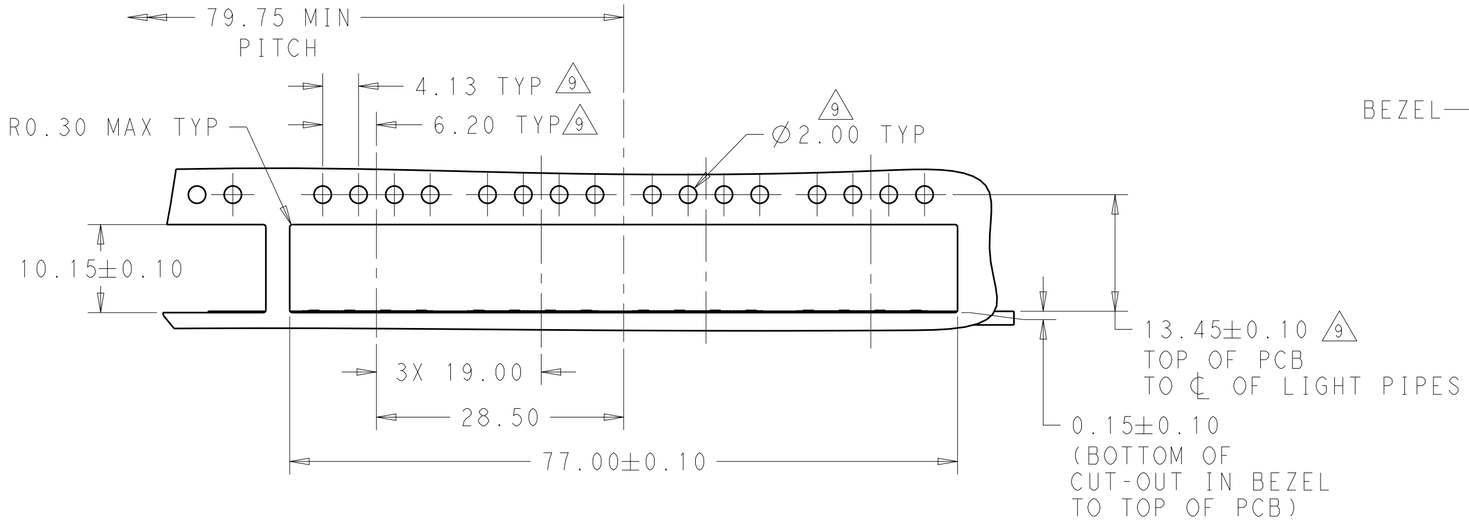

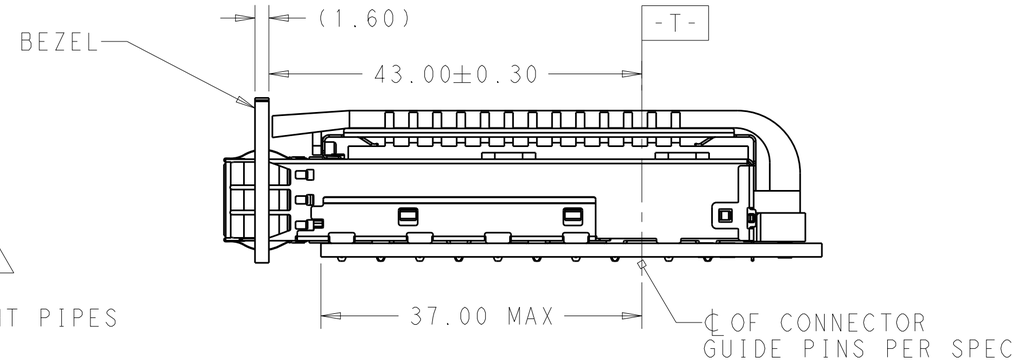

SINGLE SIDE MOUNTING
SCALE 2:1

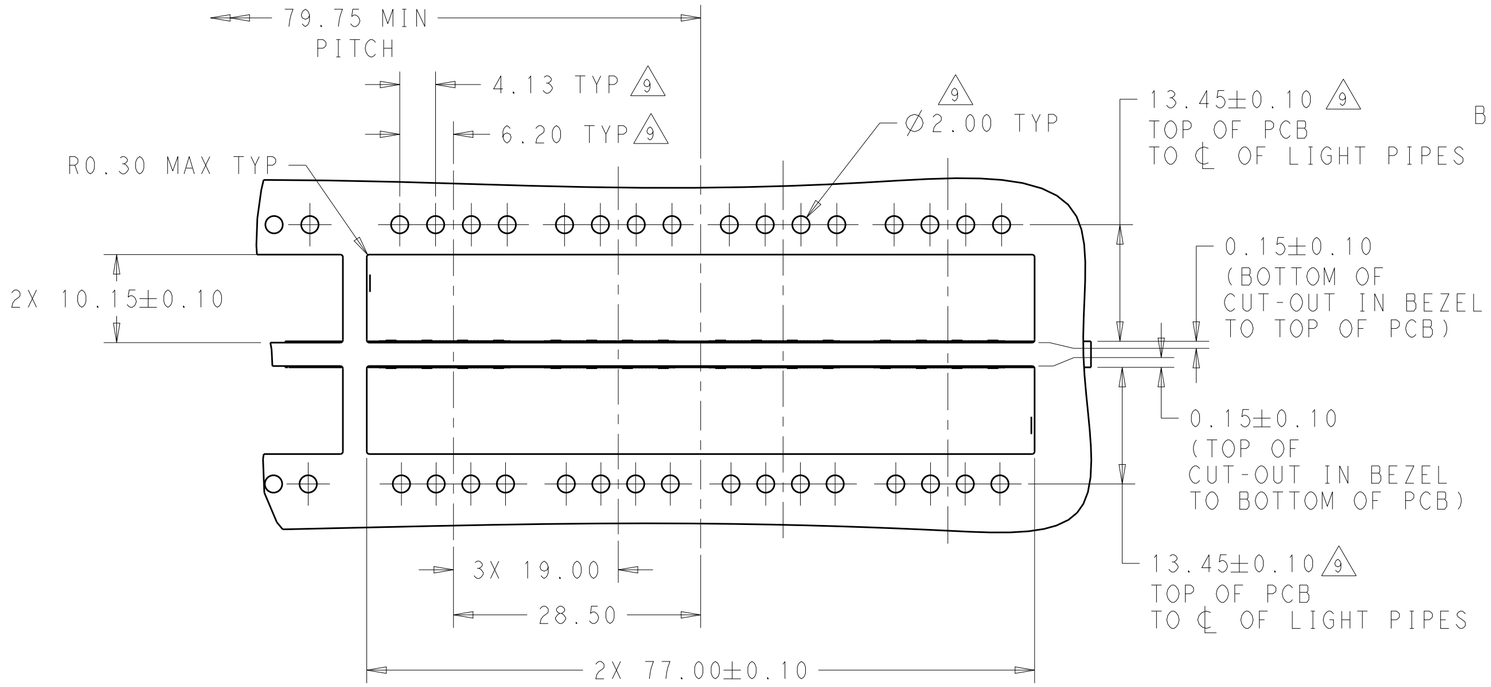

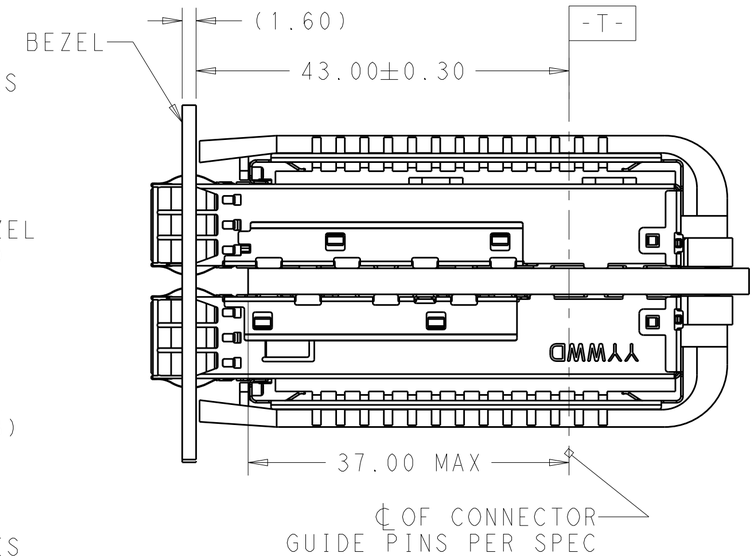

BELLY TO BELLY MOUNTING
SCALE 2:1

THIS DRAWING IS A CONTROLLED DOCUMENT.

DIMENSIONS: mm

TOLERANCES UNLESS OTHERWISE SPECIFIED:
0 PLC ±-
1 PLC ±0.25
2 PLC ±0.2
3 PLC ±-
4 PLC ±-
ANGLES ±-

MATERIAL: SEE NOTES -
FINISH: SEE NOTES -

DWN JASON YANG 30JUN2014
CHK SEAN HAN 19FEB2016
APVD -
PRODUCT SPEC 108-19428
APPLICATION SPEC 114-32023
WEIGHT -

TE Connectivity

NAME: CAGE ASSEMBLY, QSFP28, 1X4 WITH HEAT SINKS AND LIGHT PIPES, THRU BEZEL, SPRING

SIZE	CAGE CODE	DRAWING NO	RESTRICTED TO
A2	00779	C-2170790	-

CUSTOMER DRAWING | SCALE 3:1 | SHEET 7 OF 10 | REV A

THIS DRAWING IS UNPUBLISHED. RELEASED FOR PUBLICATION 20
© COPYRIGHT 20 BY - ALL RIGHTS RESERVED.

REVISIONS

P	LTR	DESCRIPTION	DATE	DWN	APVD
	-	SEE SHEET 1	-	-	-

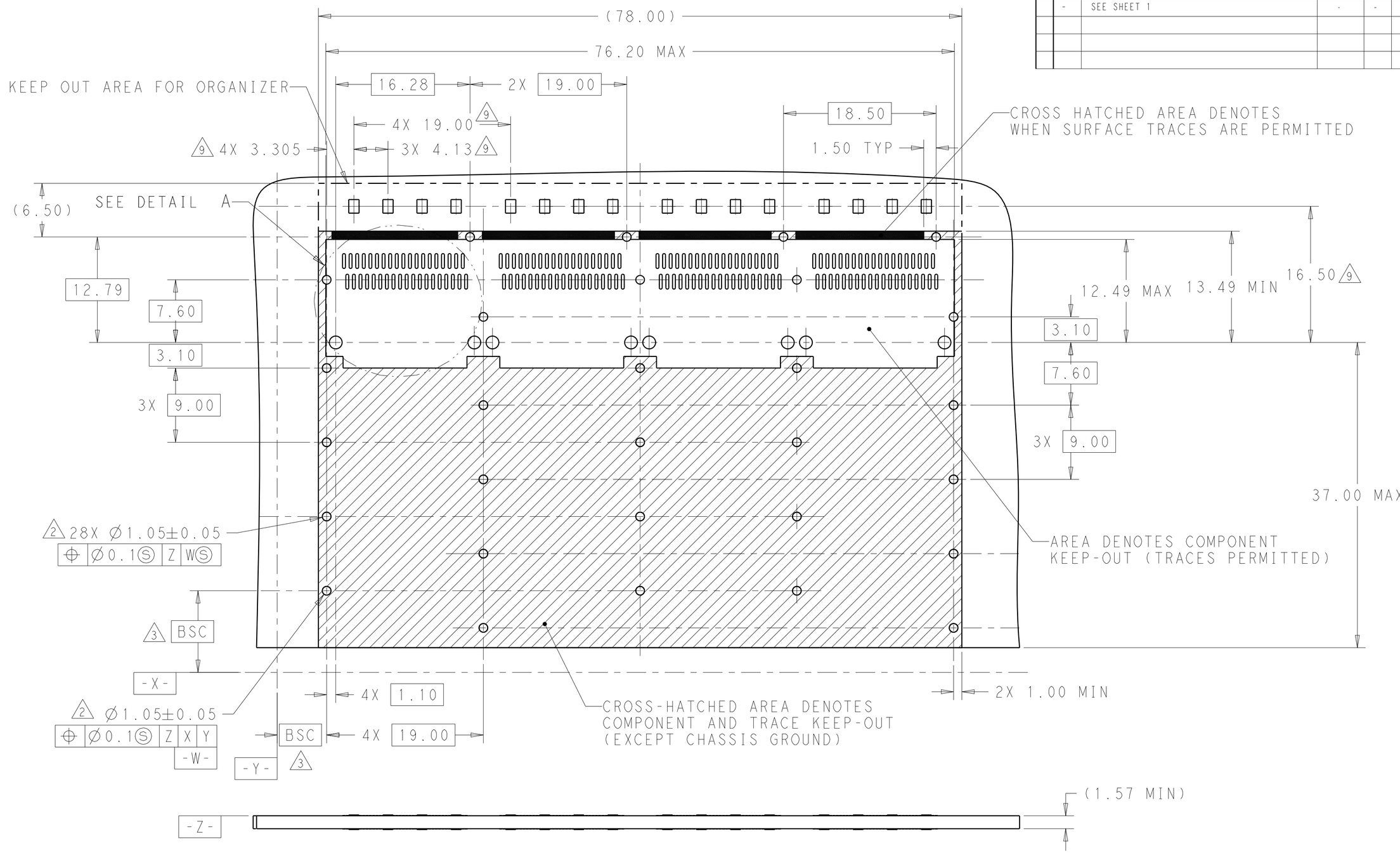

RECOMMENDED PCB LAYOUT
SINGLE SIDE MOUNTED CONFIGURATION
PCB TOLERANCE: ±0.05
SCALE 3:1

THIS DRAWING IS A CONTROLLED DOCUMENT.

DIMENSIONS: mm

TOLERANCES UNLESS OTHERWISE SPECIFIED:
0 PLC ±-
1 PLC ±0.25
2 PLC ±0.2
3 PLC ±-
4 PLC ±-
ANGLES ±-

MATERIAL: SEE NOTES -
FINISH: SEE NOTES -

DWN JASON YANG 30JUN2014
CHK SEAN HAN 19FEB2016
APVD -
PRODUCT SPEC 108-19428
APPLICATION SPEC 114-32023
WEIGHT -
CUSTOMER DRAWING

TE Connectivity

NAME: CAGE ASSEMLBY, QSFP28, 1X4 WITH HEAT SINKS AND LIGHT PIPES, THRU BEZEL, SPRING

SIZE	CAGE CODE	DRAWING NO	RESTRICTED TO
A2	00779	C-2170790	-

SCALE 1:1 SHEET 8 OF 10 REV A

THIS DRAWING IS UNPUBLISHED. RELEASED FOR PUBLICATION 20
© COPYRIGHT 20 BY - ALL RIGHTS RESERVED.

REVISIONS

P	LTR	DESCRIPTION	DATE	DWN	APVD
	-	SEE SHEET 1	-	-	-

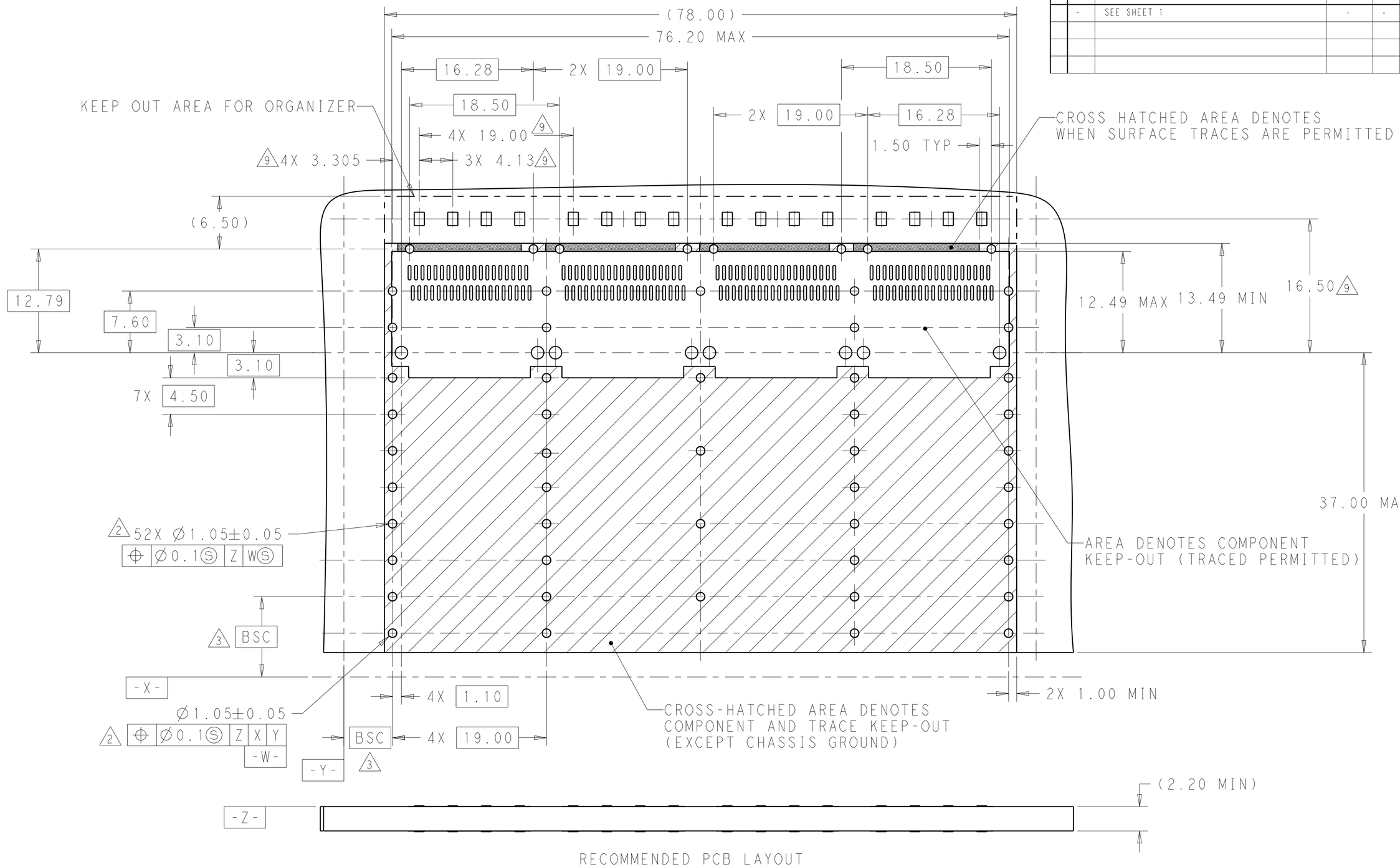

RECOMMENDED PCB LAYOUT
BELLY TO BELLY MOUNTED CONFIGURATION
PCB TOLERANCE: ±0.05
SCALE 3:1

THIS DRAWING IS A CONTROLLED DOCUMENT.

DIMENSIONS: mm

TOLERANCES UNLESS OTHERWISE SPECIFIED:
0 PLC ±-
1 PLC ±0.25
2 PLC ±0.2
3 PLC ±-
4 PLC ±-
ANGLES ±-

MATERIAL: SEE NOTES -
FINISH: SEE NOTES -

DWN JASON YANG 30JUN2014
CHK SEAN HAN 19FEB2016
APVD -
PRODUCT SPEC 108-19428
APPLICATION SPEC 114-32023
WEIGHT -

TE Connectivity

NAME: CAGE ASSEMLBY, QSFP28, 1X4 WITH HEAT SINKS AND LIGHT PIPES, THRU BEZEL, SPRING

SIZE A2 | CAGE CODE 00779 | DRAWING NO C-2170790 | RESTRICTED TO -

CUSTOMER DRAWING | SCALE 1:1 | SHEET 9 OF 10 | REV A

THIS DRAWING IS UNPUBLISHED. RELEASED FOR PUBLICATION 20
© COPYRIGHT 20 BY - ALL RIGHTS RESERVED.

REVISIONS

P	LTR	DESCRIPTION	DATE	DWN	APVD
	-	SEE SHEET 1	-	-	-

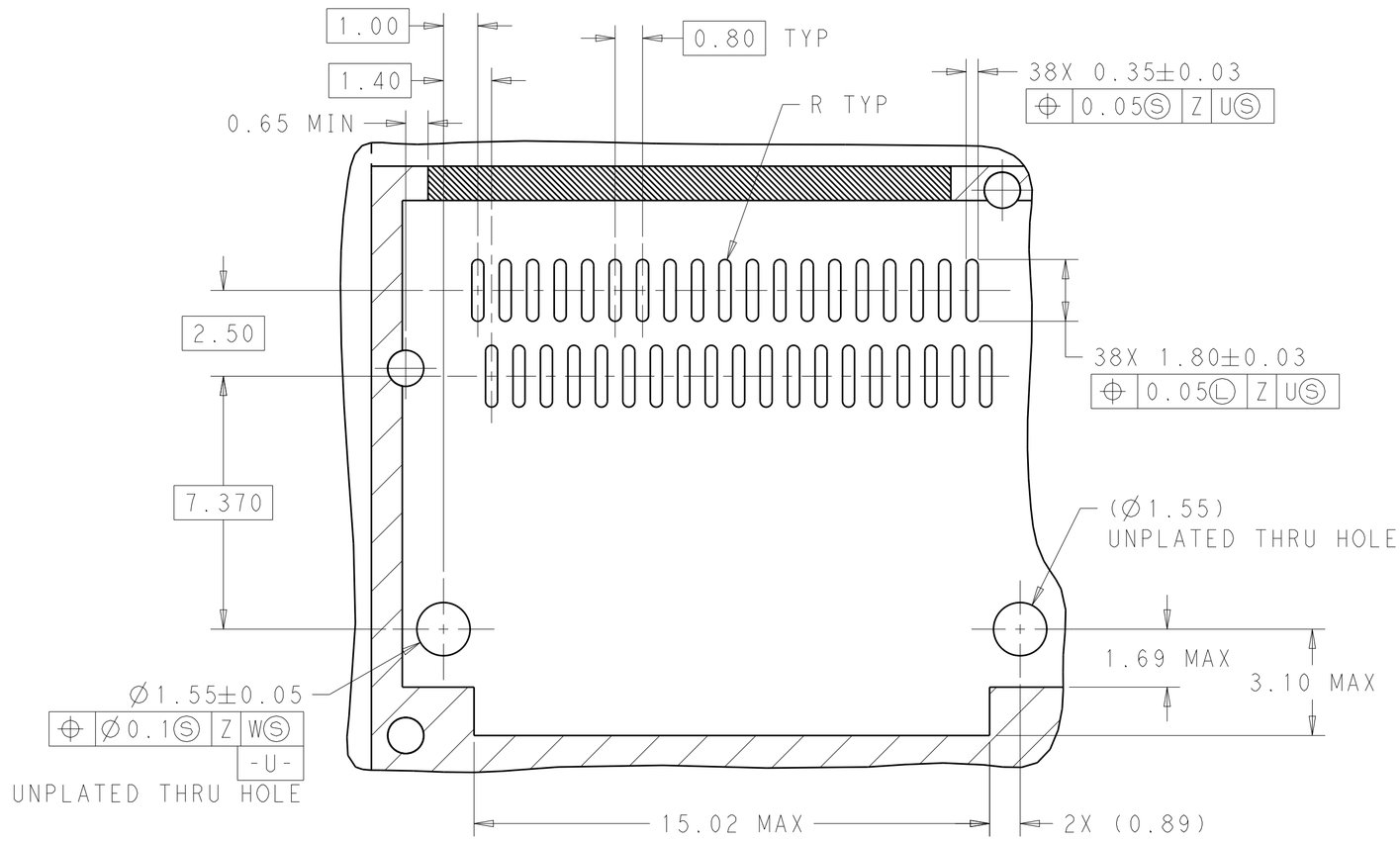

DETAIL A
RECOMMENDED CONNECTOR LAYOUT
(APPLIES TO ALL PCB LAYOUTS)
4X INDIVIDUALLY
SCALE 8:1

THIS DRAWING IS A CONTROLLED DOCUMENT.

DIMENSIONS: mm

TOLERANCES UNLESS OTHERWISE SPECIFIED:
0 PLC ±-
1 PLC ±0.25
2 PLC ±0.2
3 PLC ±-
4 PLC ±-
ANGLES ±-

MATERIAL SEE NOTES -
FINISH SEE NOTES -

DWN JASON YANG 30JUN2014
CHK SEAN HAN 19FEB2016
APVD -
PRODUCT SPEC 108-19428
APPLICATION SPEC 114-32023
WEIGHT -

TE Connectivity

NAME CAGE ASSEMLBY, QSFP28, 1X4 WITH HEAT SINKS AND LIGHT PIPES, THRU BEZEL, SPRING

SIZE	CAGE CODE	DRAWING NO	RESTRICTED TO
A2	00779	C-2170790	-

CUSTOMER DRAWING | SCALE 1:1 | SHEET 10 OF 10 | REV A