1. Mechanical Dimensions:

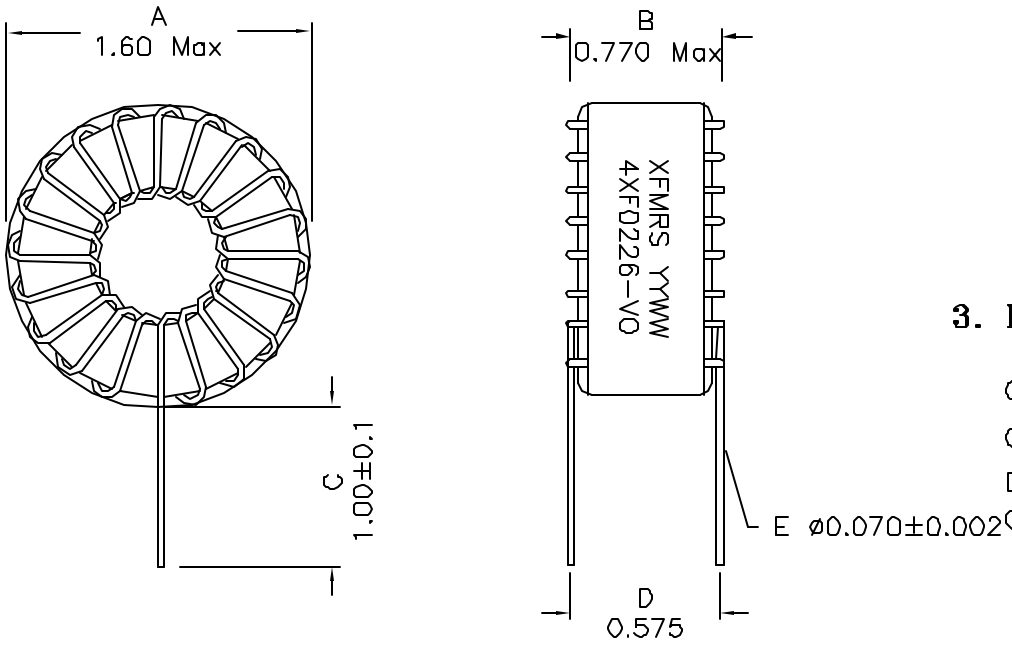

2. Schematic:

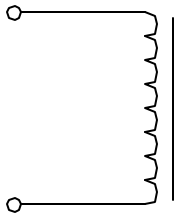

3. Electrical Specifications: @25°C

OCL: 22uH±15% @10KHz 0.1V

OCL: 20uH Typ @10KHz 0.1V, 25Adc

DC Resistance: 0.017 Ohms Max

Q: 20 Min @10KHz 0.1V

Notes:

1. Solderability: Leads shall meet MIL-STD-202G, Method 208H for solderability.
2. Flammability: UL94V-0
3. ASTM oxygen index: > 28%
4. Insulation System: Class F 155°C. UL file E151556
5. Operating Temperature Range: All listed parameters are to be within tolerance from -40°C to +85°C
6. Storage Temperature Range: -55°C to +125°C
7. Aqueous wash compatible
8. Electrical and mechanical specifications 100% tested
9. RoHS Compliant Component

DOC. REV: B/3

PROPRIETARY Document is the property of XFMRS Group & is not allowed to be duplicated without authorization.

XFMRS Inc www.XFMRS.com	Title: TOROIDAL INDUCTOR		
UNLESS OTHERWISE SPECIFIED TOLERANCES: .xxx ±0.010 Dimensions in INCH	P/N: 4XF0226-VO		REV. B
	DWN.	龚玉坤	Sep-22-05
	CHK.	李清儿	Sep-22-05
SHEET 1 OF 1	APP.	MS	Sep-22-05