DATASHEET

6 PIN DIP PHOTODARLINGTON PHOTOCOUPLER
TIL113, 4NXX, H11BX Series

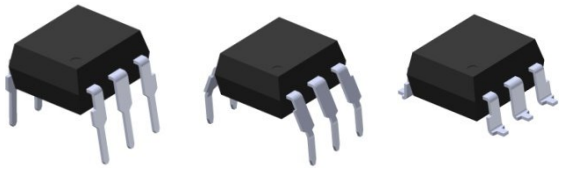

Schematic

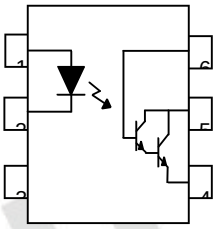

Pin Configuration
1. Anode
2. Cathode
3. No Connection
4. Emitter
5. Collector
6. Base

Features:

- 4NXX series: 4N29, 4N30, 4N31, 4N32, 4N33
- H11BX series: H11B1, H11B2, H11B3, H11B255
- High isolation voltage between input and output (Viso=5000 V rms)
- Creepage distance >7.62 mm
- Operating temperature up to +110°C
- Compact small outline package
- Pb free and RoHS compliant.
- UL and cUL approved(No. E214129)
- VDE approved (No. 132249)
- SEMKO approved
- NEMKO approved
- DEMKO approved
- FIMKO approved

Description

The TIL113, 4NXX and H11BX series of devices each consist of an infrared emitting diode optically coupled to a photo darlington detector.

They are packaged in a 6-pin DIP package and available in wide-lead spacing and SMD option.

Applications

- Low power logic circuits
- Telecommunications equipment
- Portable electronics
- Interfacing coupling systems of different potentials and impedances

Copyright © 2010, Everlight All Rights Reserved. Release Date : June 14, 2014. Issue No: DPC-0000021 Rev. 3

R
LifecyclePhase: Approved
Expired Period: Forever

Absolute Maximum Ratings (Ta=25°C)

	Parameter	Symbol	Rating	Unit
Input	Forward current	I_F	60	mA
	Peak forward current (1us, pulse)	I_{FP}	1	A
	Reverse voltage	V_R	6	V
	Power dissipation No derating required up to Ta = 100°C	P_D	120	mW
			3.8	mW/°C
Output	Power dissipation Derating factor (above Ta = 80°C)	P_C	150	mW
			6.5	mW/°C
	Collector-Emitter voltage	V_{CEO}	55	V
	Collector-Base voltage	V_{CBO}	55	V
	Emitter-Collector voltage	V_{ECO}	7	V
	Emitter-Base voltage	V_{EBO}	7	V
Total power dissipation		P_{TOT}	200	mW
Isolation voltage		V_{ISO}	5000	Vrms
Operating temperature		T_{OPR}	-55~+100	°C
Storage temperature		T_{STG}	-55~+125	°C
Soldering temperature *2		T_{SOL}	260	°C

Notes:
*1 AC for 1 minute, R.H.= 40 ~ 60% R.H. In this test, pins 1, 2 & 3 are shorted together, and pins 4, 5 & 6 are shorted together.

*2 For 10 seconds

Copyright © 2010, Everlight All Rights Reserved. Release Date : June 14, 2014. Issue No: DPC-0000021 Rev. 3

R
LifecyclePhase: Approved
Expired Period: Forever

Electro-Optical Characteristics (Ta=25°C unless specified otherwise)

Input

Parameter	Symbol	Min.	Typ.*	Max.	Unit	Condition
Forward Voltage	V_F	-	1.2	1.5	V	I_F = 10mA I_F = 50mA for H11B3
Reverse Current	I_R	-	-	10	μA	V_R = 6V
Input capacitance	C_{in}	-	50	-	pF	V = 0, f = 1MHz

Output

Parameter	Symbol	Min.	Typ.*	Max.	Unit	Condition
Collector-Emitter dark current	I_{CEO}	-	-	100	nA	V_{CE} = 10V
Collector-Emitter breakdown voltage	BV_{CEO}	55	-	-	V	I_c=1mA
Emitter-Collector breakdown voltage	BV_{CBO}	55	-	-	V	I_C=0.1mA
Emitter-Collector breakdown voltage	BV_{ECO}	7	-	-	V	I_E=0.1mA

Transfer Characteristics (T_a=25°C unless specified otherwise)

Parameter		Symbol	Min	Typ.	Max.	Unit	Condition
Current transfer ratio	4N32 4N33	CTR	500	-	-	%	I_F = 10mA ,V_{CE} = 10V
	4N29 4N30		100	-	-		
	4N31		50	-	-		
	H11B1		500	-	-		I_F = 1mA ,V_{CE} = 5V
	H11B2		200	-	-		
	H11B3		100	-	-		
	H11B255		100	-	-		I_F = 10mA ,V_{CE} = 5V
	TIL113		300	-	-		I_F = 10mA ,V_{CE} = 1V

Copyright © 2010, Everlight All Rights Reserved. Release Date : June 14, 2014. Issue No: DPC-0000021 Rev. 3

R
LifecyclePhase: Approved
Expired Period: Forever

Transfer Characteristics (T_a=25°C unless specified otherwise)

Parameter		Symbol	Min	Typ.	Max.	Unit	Condition
Collector-emitter saturation voltage	4N29 4N30 4N32 4N33	$V_{CE(sat)}$	-	-	1.0	V	I_F = 8mA ,I_c = 2mA
	4N31 TIL113		-	-	1.2		I_F = 8mA ,I_c = 2mA
	H11B1 H11B2 H11B3		-	-	1.0		I_F = 1mA ,I_c = 1mA
	H11B255		-	-	1.0		I_F = 50mA ,I_c = 50mA
Isolation resistance		R_{IO}	10^{11}	-	-	Ω	V_{IO} = 500Vdc
Input-output Capacitance		C_{IO}	-	0.8	-	pF	V_{IO} = 0, f = 1MHz
Turn-on time	H11B1 H11B2 H11B3 H11B255	Ton	-	25	-	µs	V_{CC} = 10V, I_F = 10mA, R_L = 100Ω
	4N29 4N30 4N31 4N32 4N33 TIL113		-	-	5		V_{CC} = 10V, I_C = 50mA, I_F=200mA
Turn-off time	H11B1 H11B2 H11B3 H11B255	Toff	-	18	-	µs	V_{CC} = 10V, I_F = 10mA, R_L = 100Ω
	4N32 4N33 TIL113		-	-	100		V_{CC} = 10V, I_C = 50mA, I_F=200mA
	4N29 4N30 4N31		-	-	40		

* Typical values at T_a = 25°C

Copyright © 2010, Everlight All Rights Reserved. Release Date : June 14, 2014. Issue No: DPC-0000021 Rev. 3

R
LifecyclePhase: Approved
Expired Period: Forever

Typical Electro-Optical Characteristics Curves

Figure 1. Forward Current vs Forward Voltage

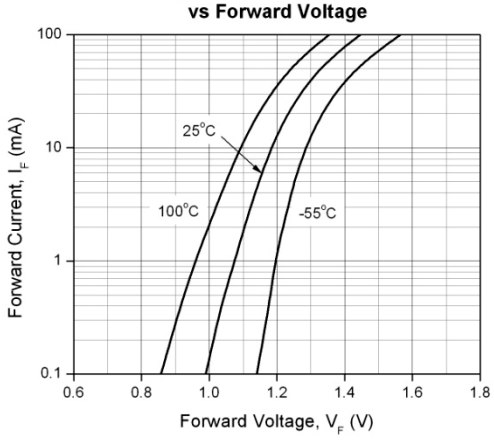

Figure 2. Current Transfer Ratio vs. Ambient Temperature

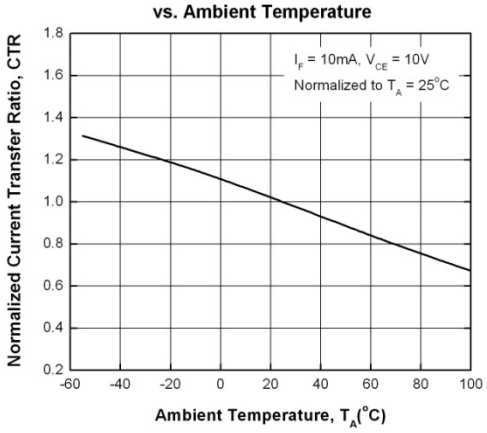

Figure 3. Normalized Current Transfer Ratio vs Forward Current

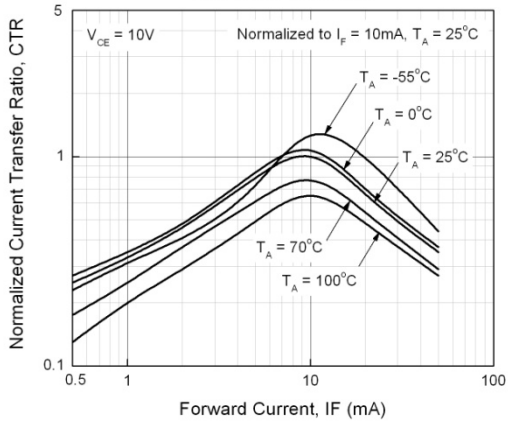

Figure 4. Collector Dark Current vs Ambient Temperature

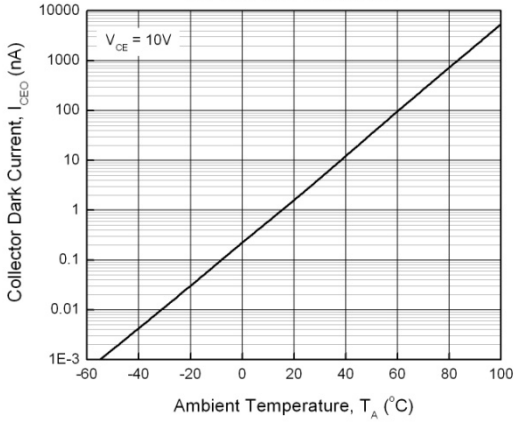

Figure 5. Turn-on Time vs Forward Current

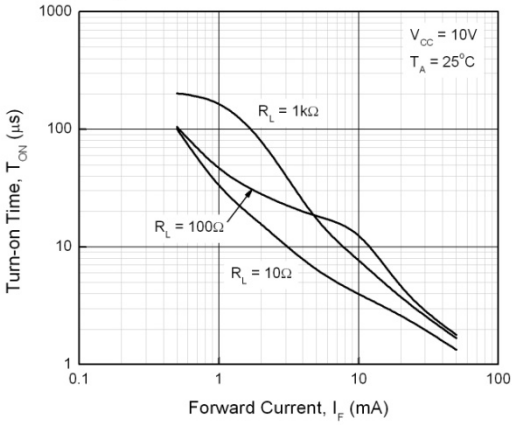

Figure 6. Turn-off Time vs Forward Current

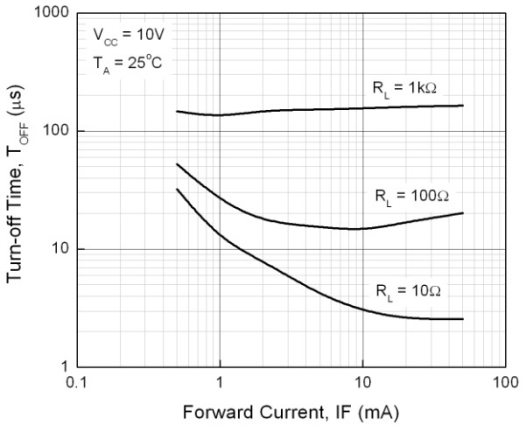

Copyright © 2010, Everlight All Rights Reserved. Release Date : June 14, 2014. Issue No: DPC-0000021 Rev. 3

R
LifecyclePhase: Approved
Expired Period: Forever

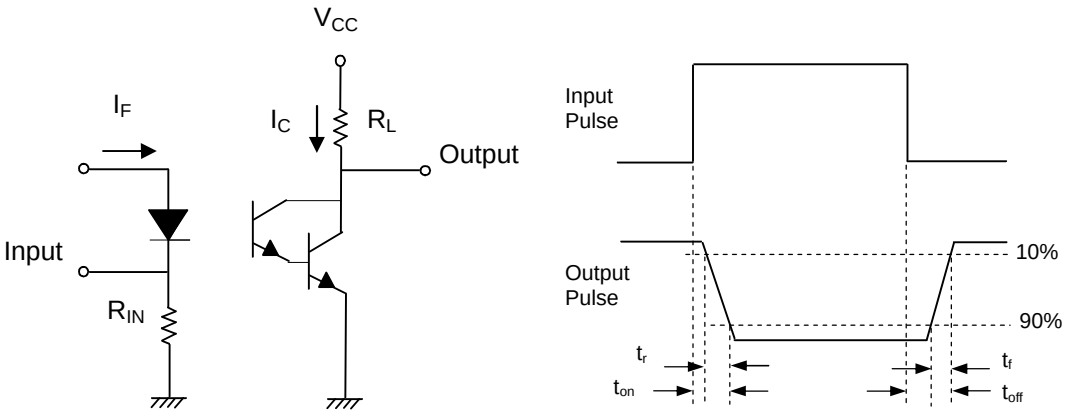

Figure 7. Switching Time Test Circuit & Waveforms

EVERLIGHT

Copyright © 2010, Everlight All Rights Reserved. Release Date : June 14, 2014. Issue No: DPC-0000021 Rev. 3 www.everlight.com
R
LifecyclePhase: Approved
Expired Period: Forever

Order Information

Part Number

4NXXY(Z)-V
or H11BXY(Z)-V
or TIL113Y(Z)-V

Note

XX = Part No. for 4NXX series (29, 30, 31, 32 or 33)
X = Part No. for H11BX series (1, 2, 3 or 255)
Y = Lead form option (S, S1, M or none)
Z = Tape and reel option (TA, TB or none).
V = VDE safety (optional)

Option	Description	Packing quantity
None	Standard DIP-6	65 units per tube
M	Wide lead bend (0.4 inch spacing)	65 units per tube
S (TA)	Surface mount lead form + TA tape & reel option	1000 units per reel
S (TB)	Surface mount lead form + TB tape & reel option	1000 units per reel
S1 (TA)	Surface mount lead form (low profile) + TA tape & reel option	1000 units per reel
S1 (TB)	Surface mount lead form (low profile) + TB tape & reel option	1000 units per reel

EVERLIGHT

Copyright © 2010, Everlight All Rights Reserved. Release Date : June 14, 2014. Issue No: DPC-0000021 Rev. 3 www.everlight.com
R
LifecyclePhase: Approved
Expired Period: Forever

Package Dimension (Dimensions in mm)

Standard DIP Type

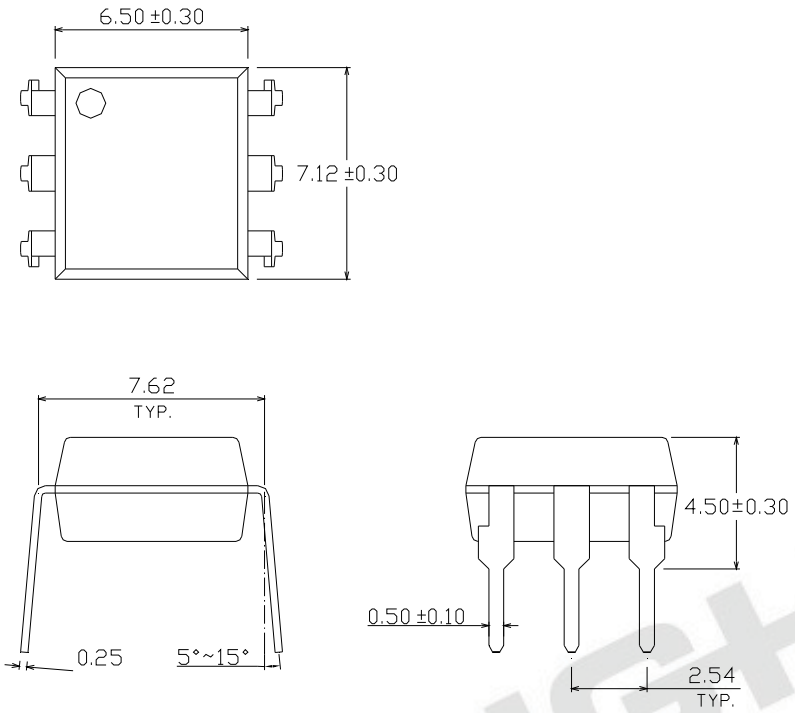

Option M Type

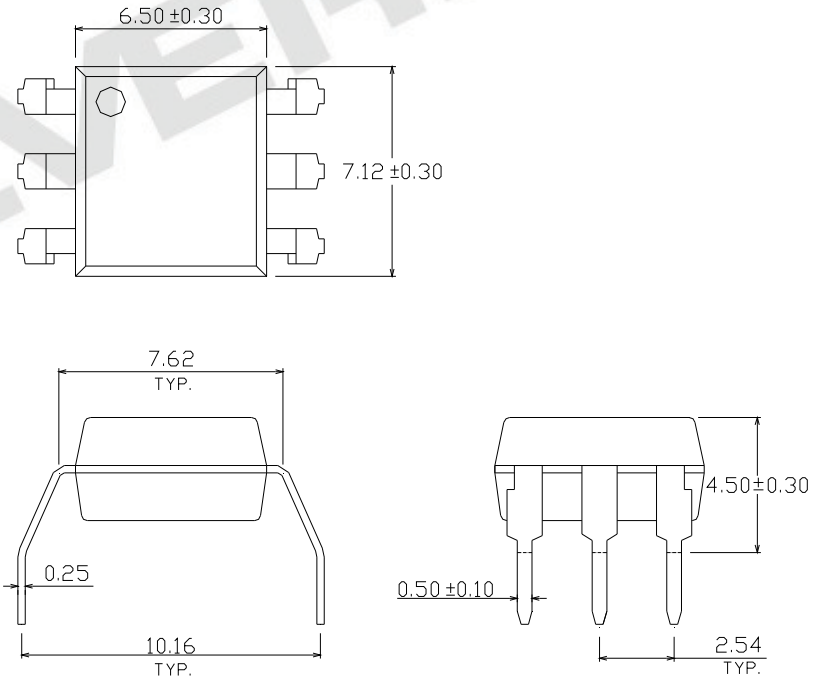

Copyright © 2010, Everlight All Rights Reserved. Release Date : June 14, 2014. Issue No: DPC-0000021 Rev. 3

R
LifecyclePhase: Approved
Expired Period: Forever

Option S Type

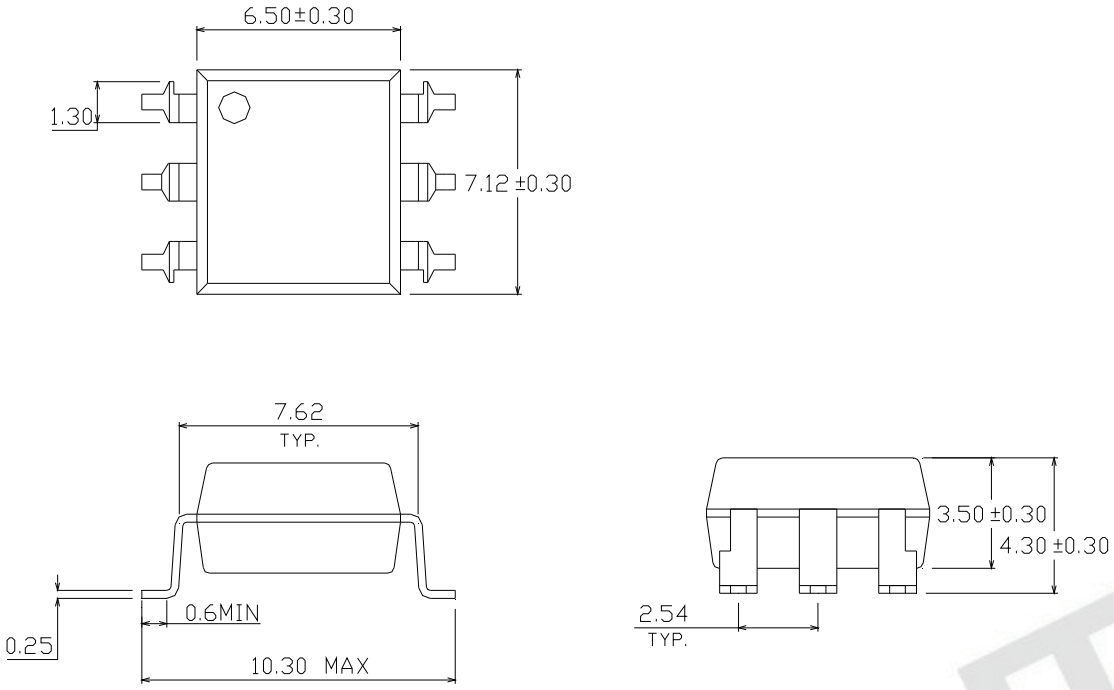

Option S1 Type

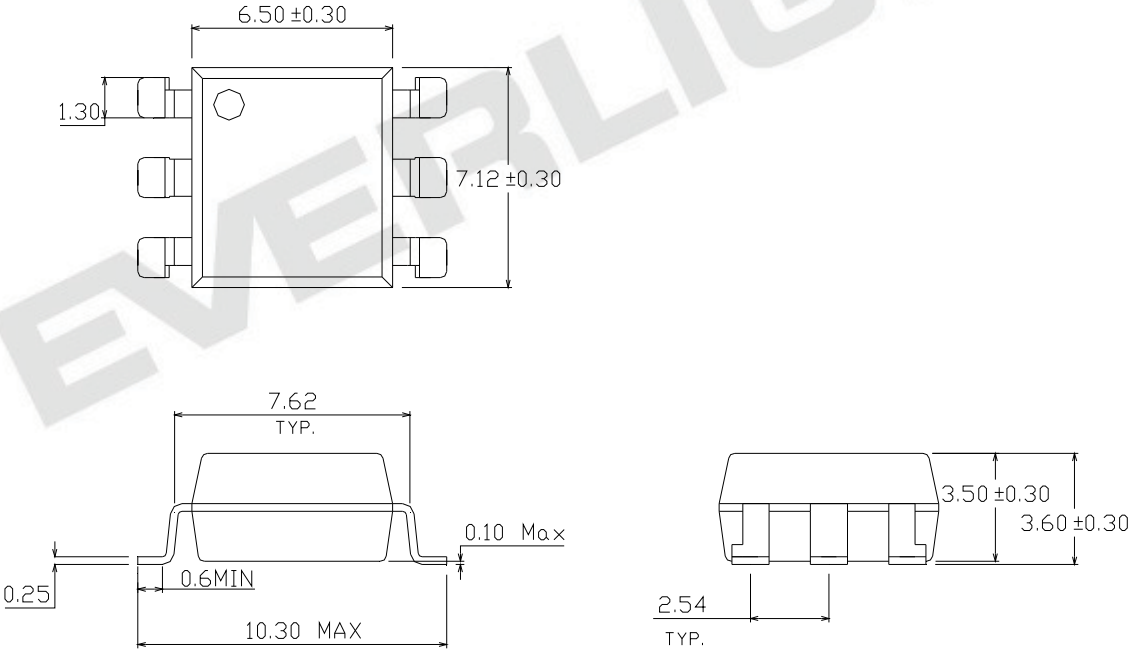

EVERLIGHT

Copyright © 2010, Everlight All Rights Reserved. Release Date : June 14, 2014. Issue No: DPC-0000021 Rev. 3 www.everlight.com

R
LifecyclePhase: Approved
Expired Period: Forever

Recommended pad layout for surface mount leadform

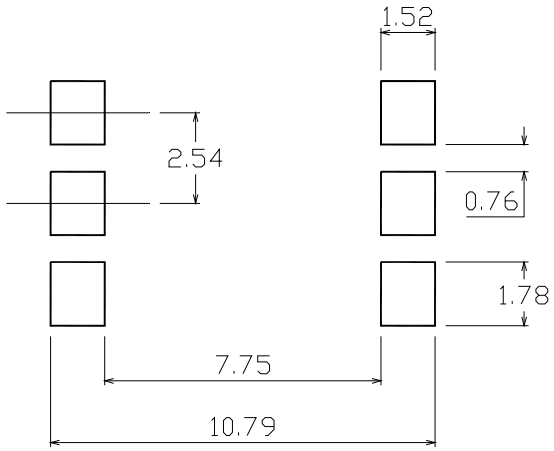

Device Marking

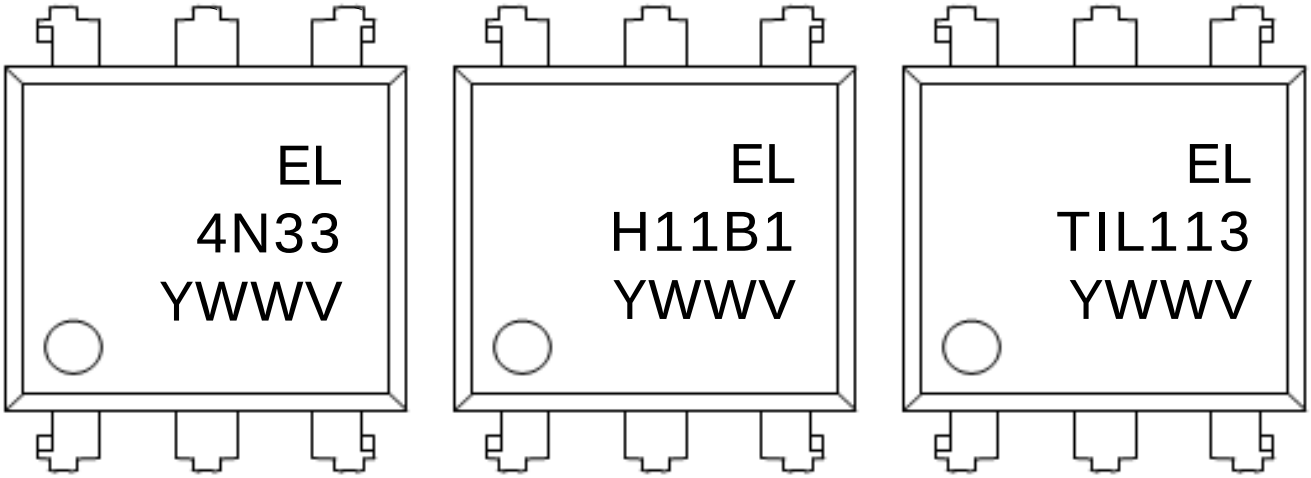

Notes

EL	denotes Everlight
4N33 TIL113	
H11B1	denotes Part Number
Y	denotes 1 digit Year code
WW	denotes 2 digit Week code
V	denotes VDE safety (optional)

Copyright © 2010, Everlight All Rights Reserved. Release Date : June 14, 2014. Issue No: DPC-0000021 Rev. 3

R
LifecyclePhase: Approved
Expired Period: Forever

Tape & Reel Packing Specifications

Option TA

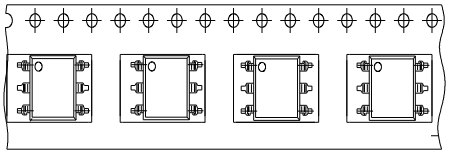

Direction of feed from reel

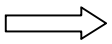

Option TB

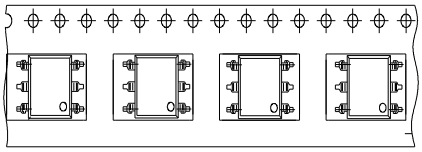

Direction of feed from reel

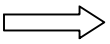

Tape dimensions

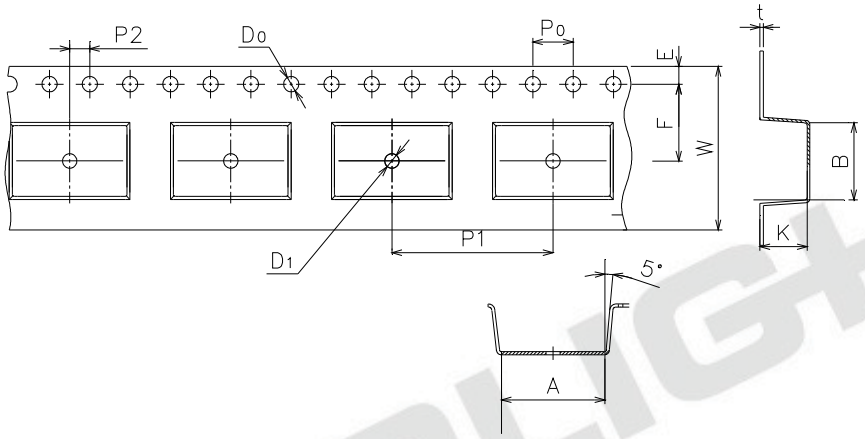

Dimension No.	A	B	Do	D1	E	F
Dimension(mm)	10.4±0.1	7.5±0.1	1.5±0.1	1.5+0.1/-0	1.75±0.1	7.5±0.1
Dimension No.	**Po**	**P1**	**P2**	**t**	**W**	**K**
Dimension(mm)	4.0±0.15	12±0.1	2.0±0.1	0.35±0.03	16.0±0.2	4.5±0.1

Copyright © 2010, Everlight All Rights Reserved. Release Date : June 14, 2014. Issue No: DPC-0000021 Rev. 3

R
LifecyclePhase: Approved
Expired Period: Forever

Precautions for Use

1. Soldering Condition

1.1 (A) Maximum Body Case Temperature Profile for evaluation of Reflow Profile

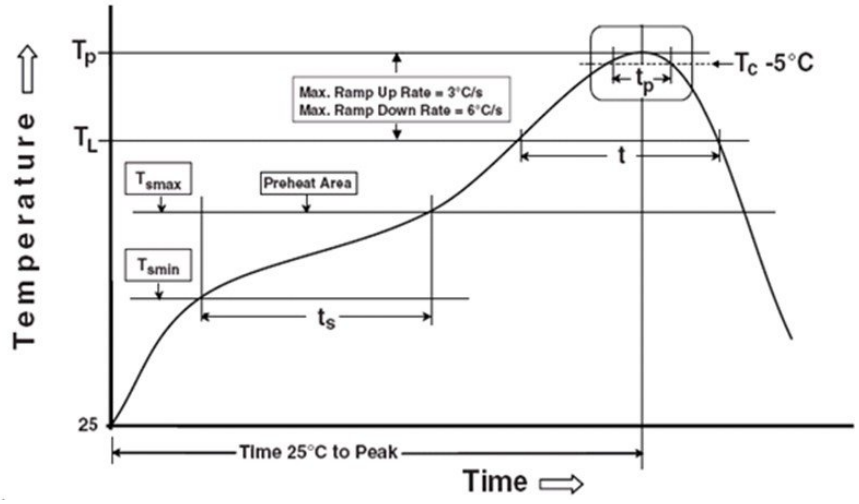

Note: Reference: IPC/JEDEC J-STD-020D

Preheat	
Temperature min (T_{smin})	150 °C
Temperature max (T_{smax})	200°C
Time (T_{smin} to T_{smax}) (t_s)	60-120 seconds
Average ramp-up rate (T_{smax} to T_p)	3 °C/second max
Other	
Liquidus Temperature (T_L)	217 °C
Time above Liquidus Temperature (t_L)	60-100 sec
Peak Temperature (T_P)	260°C
Time within 5 °C of Actual Peak Temperature: T_P - 5°C	30 s
Ramp- Down Rate from Peak Temperature	6°C /second max.
Time 25°C to peak temperature	8 minutes max.
Reflow times	3 times

.

Copyright © 2010, Everlight All Rights Reserved. Release Date : June 14, 2014. Issue No: DPC-0000021 Rev. 3

LifecyclePhase: Approved
Expired Period: Forever

DISCLAIMER

1. Above specification may be changed without notice. EVERLIGHT will reserve authority on material change for above specification.
2. When using this product, please observe the absolute maximum ratings and the instructions for using outlined in these specification sheets. EVERLIGHT assumes no responsibility for any damage resulting from use of the product which does not comply with the absolute maximum ratings and the instructions included in these specification sheets.
3. These specification sheets include materials protected under copyright of EVERLIGHT corporation. Please don't reproduce or cause anyone to reproduce them without EVERLIGHT's consent.

EVERLIGHT

Copyright © 2010, Everlight All Rights Reserved. Release Date : June 14, 2014. Issue No: DPC-0000021 Rev. 3

R
LifecyclePhase: Approved
Expired Period: Forever