Ordering Data

Finishing Options

Option	Contact Area	Remainder	Spring
1	2.54 µm (100 µin.) min 60/40 tin-lead	2.54 µm (100 µin.) min 60/40 tin-lead	0.76 µm (30 µin.) 93/7 tin-lead
2	0.38 µm (15 µin.) min gold over nickel	Gold flash	Gold flash over nickel
3	0.76 µm (30 µin.) min gold over nickel	Gold flash	Gold flash over nickel
4	1.02 µm (40 µin.) min gold over nickel	Gold flash	Gold flash over nickel

Part Numbers

Wire Size AWG	Insulation OD Size	Spring Force	Packaging	Finishing Option (see Finishing Options Table)			
				1	2	3	4
18, 20 or	1.07--1.52 mm	Standard	Reel	---	48241-000	48231-000	48276-000
Two 22 or	(0.042--0.060 in.)	Standard	Loose piece	---	48250-000	48266-000	---
Two 24		High	Reel	47221-000	48244-000	48047-000	47441-000
		High	Loose piece	47716-000	48253-000	48232-000	47713-000
		Ultra-high	Reel	47648-000	48247-000	48052-000	47566-000
		Ultra-high	Loose piece	47749-000	48256-000	48233-000	47746-000
22, 24, 26		Standard	Reel	47445-000	48242-000	48049-000	47457-000
or Two 26	0.91--1.52 mm	Standard	Loose piece	47747-000	48251-000	48235-000	47743-000
or Two 28	(0.036--0.060 in.)	High	Reel	47217-000	48245-000	48046-000	47439-000
		High	Loose piece	47715-000	48254-000	48234-000	47712-000
		Ultra-high	Reel	47649-000	48248-000	48051-000	47565-000
		Ultra-high	Loose piece	47750-000	48257-000	48236-000	47745-000
28, 30, 32		Standard	Reel	47446-000*	48243-000*	48048-000*	47456-000*
or Two 30	0.71--1.37 mm	Standard	Loose piece	47748-000*	48252-000*	48238-000*	47742-000*
or Two 32	(0.028--0.054 in.)	High	Reel	47213-000*	48246-000*	48045-000*	47437-000*
		High	Loose piece	47714-000*	48255-000*	48237-000*	47711-000*
		Ultra-high	Reel	47650-000*	48249-000*	48050-000*	47564-000*
		Ultra-high	Loose piece	47751-000*	48258-000	48239-000*	47744-000*
32, 34, 36		Standard	Reel	75543-009*	---	75543-015*	75543-003*
	0.51--1.02 mm	Standard	Loose piece	75543-010*	---	75543-016*	75543-004*
	(0.020--0.040 in.)	High	Reel	75543-007*	---	75543-013*	75543-001*
		High	Loose piece	75543-008*	---	75543-014*	75543-002*
		Ultra-high	Reel	75543-011*	---	75543-017*	75543-005*
		Ultra-high	Loose piece	75543-012*	---	75543-018*	75543-006*

Ordering data shown is for our standard product offering. For special sizes or high-volume orders, contact your authorized Berg Electronics representative.

*Indicates UL recognition only.

Customer Support Materials

Description	Order No.	Description	Order No.
Customer Product Drawings	By Part No.	Application Drawings	TA-75, TA-146
Product Specifications	BUS-12-067	Product Samples	Upon Request

Discrete Crimp-to-Wire Pins/Receptacles/ Housings

2.54 mm (0.100 in.) Centerline

Crimp-to-Wire Mini-PV™ Receptacle

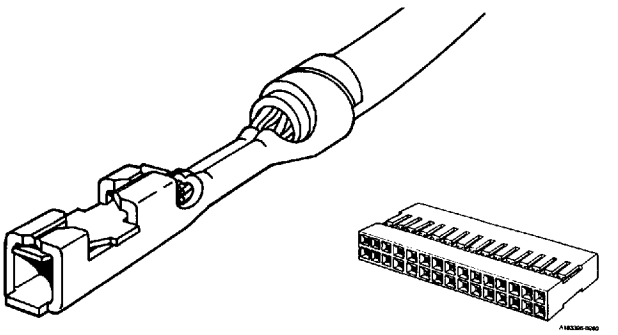

Features

- Dual-metal contact design provides constant retention force after repeated cycles.
- Choice of three spring thicknesses to meet specific insertion and withdrawal requirements.
- A wide range of application machines is offered to reduce application costs.
- Available in a variety of gold and tin-lead platings.

Mating Data

Mates with most 2.54 mm (0.100 in.) min centerline products with 0.64 mm (0.025 in.) square or round pins. See Table below for mating pin lengths.

Mating Pin Lengths

- Discrete applications
  - Minimum.... 4.32 mm (0.170 in.)
  - Nominal..... 5.08 mm (0.200 in.)
  - Maximum ... 5.59 mm (0.220 in.)
- Housing applications
  - Minimum .... 5.08 mm (0.200 in.)
  - Nominal ..... 5.84 mm (0.230 in.)
  - Maximum .... 6.22 mm (0.245 in.)

Berg Electronics Products **Page**

- Crimp-to-Wire Pin in Mini-Latch Housing 13-10 and13-16
- Friction Latch Passive Latching System II..... 13-14
- BergStik®..... 13-50
- BergPin® ..... 13-106 to 13-116
- Right-Angle 2-Row Header 13-61
- Shrouded Header... 13-84 to 13-104

Specifications

- ASTM B-122
- MIL-M-20693
- MIL-P-46129
- QQ-C-533
- ASTM B-579
- MIL-G-45204
- QQ-N-290
- QQ-B-613

Approvals and Certifications

File no. E66906

File no. LR46923

Application Equipment

Berg Electronics Products **Page**

- PV-250A Semi-automatic application machine..... 13-34
- PV-272 Semi-automatic crimping machine..... 13-34
- OL-740 Semi-automatic two-ton bench press..... 13-35
- OL-700 Fully automatic application machine (14--26 AWG) 13-35
- Handtools 13-36

Technical Data

Materials

- Body..... Brass or cupro-nickel
- Spring ..... Beryllium-copper

Plating

- Option 1
  - Contact area ..... 2.54 µm (100 µin.) min 60/40 tin-lead
  - Remainder..... 2.54 µm (100 µin.) min 60/40 tin-lead
  - Spring ..... 0.76 µm (30 µin.) 93/7 tin-lead
- Option 2
  - Contact area ... 0.38 µm (15 µin.) min gold over nickel
  - Remainder..... Gold flash
  - Spring ..... Gold flash over nickel
- Option 3
  - Contact area ... 0.76 µm (30 µin.) min gold over nickel
  - Remainder..... Gold flash
  - Spring ..... Gold flash over nickel
- Option 4
  - Contact area ... 1.02 µm (40 µin.) min gold over nickel
  - Remainder..... Gold flash
  - Spring ..... Gold flash over nickel
- Option 5
  - Contact area ..... 0.76 µm (30 µin.) min gold
  - Remainder..... Cupro-nickel base material
  - Spring ..... Gold flash over nickel

Spring Thickness

- Standard (for use in Mini-Latch housings with 40--72 positions)..... 0.09 mm (0.0035 in.)
- High (for use in Mini-Latch housings with 10--50 positions) ..... 0.12 mm (0.0048 in.)
- Ultra-high (for use in Mini-Latch housings with 2--20 positions) ..... 0.17 mm (0.0065 in.)

Electrical Performance

- Insulation resistance..... 5000 MΩ min
- Contact resistance..... 15 mΩ max after environmental tests
- Withstanding voltage ..... 1000 V ac rms
- Current rating ..... 3 amp continuous, depending on wire size

Mechanical Performance

- Insertion force (max), gold finish
  - Standard spring..... 2.35 N (240 gf)
  - High spring ..... 4.41 N (450 gf)
  - Ultra high spring..... 10.79 N (1100 gf)
- Withdrawal force (min), gold finish
  - Standard spring..... 0.45 N (45 gf)
  - High spring ..... 0.75 N (75 gf)
  - Ultra high spring..... 1.75 N (175 gf)
- Durability (mating cycles, gold finish)..... 1000

Operating Environment

- Temperature range ..... -65°C to +125°C
- Relative humidity range..... 10% to 95%

Packaging

- Reels
- Boxes (loose piece)

Description

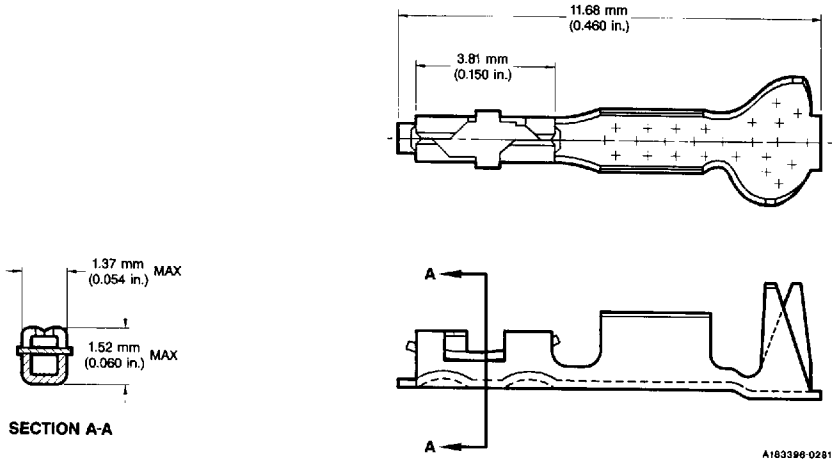

Crimping Specifications

MINI-PV™ TERMINAL

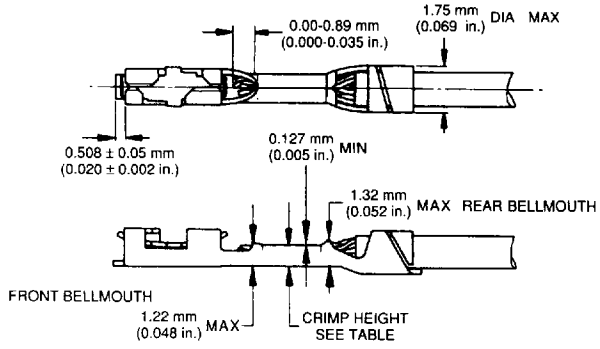

MINI-PV™ LATCH HOUSING

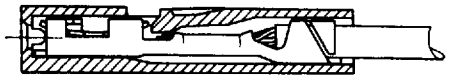

Wire Size (AWG)	Crimp Height	Insulation Diameter	
		Loose Wire Application	Housing Application
18--20	1.07--1.12 mm (0.042--0.044 in.)	1.07--2.62 mm (0.042--0.103 in.)	1.07--1.52 mm (0.042--0.060 in.)
22--26	0.81--0.86 mm (0.032--0.034 in.)	0.91--2.62 mm (0.036--0.103 in.)	0.91--1.52 mm (0.036--0.060 in.)
28--32	0.66--0.71 mm (0.026--0.028 in.)	0.71--1.37 mm (0.028--0.054 in.)	0.71--1.37 mm (0.028--0.054 in.)
32--36	0.56--0.61 mm (0.022--0.024 in.)	0.51--1.02 mm (0.020--0.040 in.)	0.51--1.02 mm (0.020--0.040 in.)