molex
one company > a world of innovation

This document was generated on 05/31/2010

PLEASE CHECK WWW.MOLEX.COM FOR LATEST PART INFORMATION

Part Number: 0476393000
Status: Active
Overview: slimline_serial_ata_odd_connectors
Description: 1.00mm (.039"), 1.27mm (.050") Pitch Removeable Interposer for Dual- Piece Slimline Serial ATA Connector Assembly, Vertical, SMT, Gold (Au) Flash Plating, Leadfree

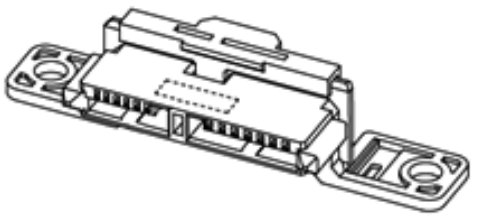

Series image - Reference only

Documents:

- 3D Model
- Drawing (PDF)
- Product Specification PS-47628-001 (PDF)
- RoHS Certificate of Compliance (PDF)

Agency Certification

CSA	LR19980
UL	E29179

General

Product Family	PCB Receptacles
Series	47639
Application	Board-to-Board
Overview	slimline_serial_ata_odd_connectors
Product Name	Serial ATA, Slimline Serial ATA

Physical

Circuits (Loaded)	13
Circuits (maximum)	13
Color - Resin	Black
Durability (mating cycles max)	500
Flammability	94V-0
Glow-Wire Compliant	No
Guide to Mating Part	Yes
Keying to Mating Part	Yes
Lock to Mating Part	Yes
Material - Metal	Copper Alloy
Material - Plating Mating	Gold
Material - Plating Termination	Nickel
Material - Resin	High Temperature Thermoplastic
Number of Rows	1
Orientation	Vertical
PCB Locator	No
PCB Retention	Yes
Packaging Type	Tray
Pitch - Mating Interface (in)	0.039 In, 0.050 In
Pitch - Mating Interface (mm)	1.00 mm, 1.27 mm
Pitch - Term. Interface (in)	0.039 In, 0.050 In
Pitch - Term. Interface (mm)	1.00 mm, 1.27 mm
Plating min: Mating (µin)	2
Plating min: Mating (µm)	0.05
Polarized to Mating Part	Yes
Polarized to PCB	Yes
Stackable	No
Temperature Range - Operating	-35°C to +85°C
Termination Interface: Style	Screw or Lug

Electrical

Current - Maximum per Contact	1.5A
Grounding to PCB	Yes
Voltage - Maximum	15V DC

EU RoHS
ELV and RoHS Compliant
REACH SVHC
Contains SVHC: No
Halogen-Free Status
Not Halogen-Free

China RoHS

Need more information on product environmental compliance?

Email productcompliance@molex.com
For a multiple part number RoHS Certificate of Compliance, click here

Please visit the Contact Us section for any non-product compliance questions.

Search Parts in this Series
47639Series

Solder Process Data

Duration at Max. Process Temperature (seconds)	10
Lead-free Process Capability	Reflow Capable (SMT only)
Max. Cycles at Max. Process Temperature	1
Process Temperature max. C	260

Material Info

Reference - Drawing Numbers

Packaging Specification	PK-47639-003
Product Specification	PS-47628-001
Sales Drawing	SD-47639-300, SD-47639-400

This document was generated on 05/31/2010

PLEASE CHECK WWW.MOLEX.COM FOR LATEST PART INFORMATION

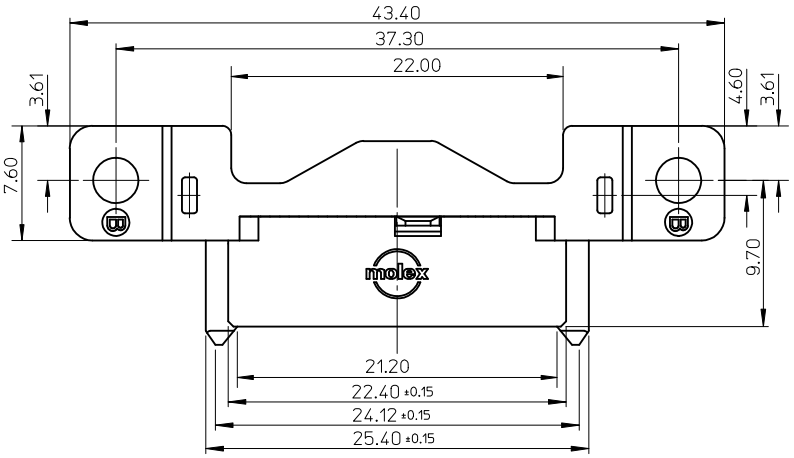

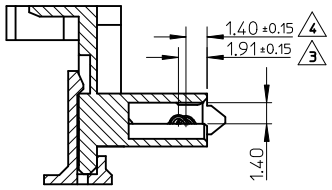

SECTION X-X

NOTES :

1. MATERIAL:
   HOUSING: HIGH TEMPERATURE THERMOPLASTIC, UL94V-0, BLACK.
   TERMINAL: COPPER ALLOY
2. PLATING:
   TERMINAL:
   CONTACT AREA: GOLD PLATING.
   UNDERPLATING: NICKEL PLATING.
3. FOR P1 PIN ONLY.
4. FOR PIN P2 THRU P6.
5. PACKAGE: TRAY
6. PRODUCT SPEC: PS-47628-001.
7. SCREW TORQUE: 2.0 kgf.cm REF.
8. THE PRODUCT COMPLIANT TO RoHS DIRECTIVES 2002/95/EC AND ELV 2000/53/EC.

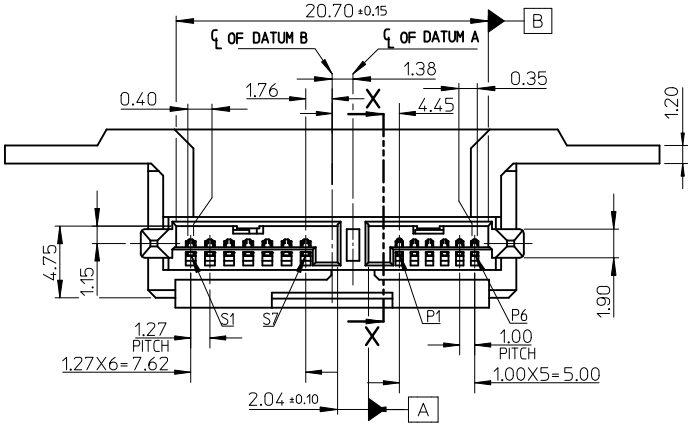

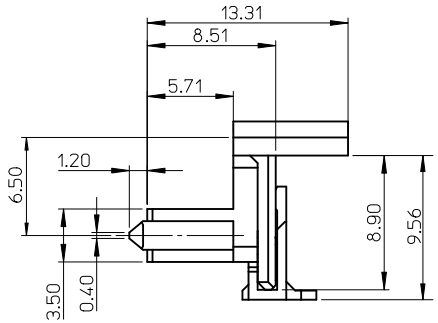

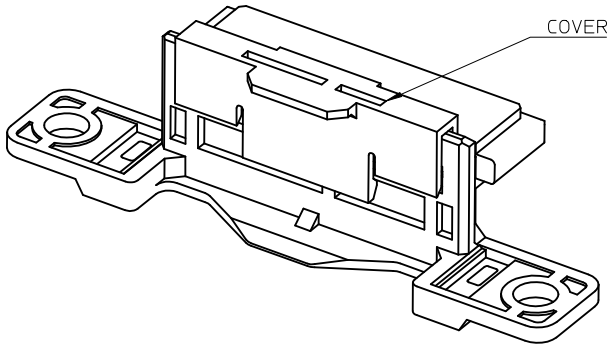

P/N	CONTACT GOLD PLATING SPEC
47639-3200	0.76 MICRONS MIN
47639-3100	0.38 MICRONS MIN
47639-3000	Au FLASH

REVISED
EC NO: SH2010-0202 2009/12/22
DRWN:GLLI 2009/12/22
CH'KD:XISONG 2010/01/22
APPR:RZHANG
DESCRIPTION
B
REV

QUALITY SYMBOLS
FA=0
FC=0
FP=0

GENERAL TOLERANCES (UNLESS SPECIFIED)

	mm	INCH
4 PLACES	± ---	± ---
3 PLACES	± ---	± ---
2 PLACES	± 0.15	± ---
1 PLACE	± 0.25	± ---
ANGULAR ± 3 °		

DRAFT WHERE APPLICABLE MUST REMAIN WITHIN DIMENSIONS

DIMENSION STYLE: MM ONLY
SCALE: 3:1
DESIGN UNITS: METRIC
THIRD ANGLE PROJECTION

DRAWN BY: DIXON LI DATE: 2008/11/27
CHECKED BY: STARY SONG DATE: 2008/11/27
APPROVED BY: HARVEY WANG DATE: 2008/11/27

TITLE: INTERPOSER OF 2 PCS SLIMLINE SATA VERTICAL SMT TYPE

MOLEX INCORPORATED

MATERIAL NO.: SEE TABLE
DOCUMENT NO.: SD-47639-300
SHEET NO.: 1 OF 1
SIZE: A3

THIS DRAWING CONTAINS INFORMATION THAT IS PROPRIETARY TO MOLEX INCORPORATED AND SHOULD NOT BE USED WITHOUT WRITTEN PERMISSION

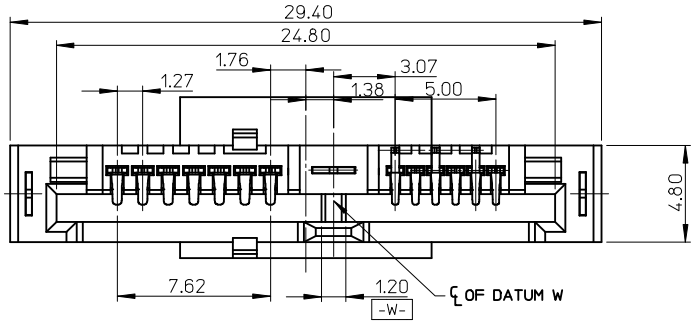

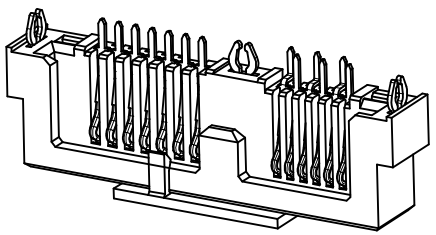

NOTES :
1.MATERIAL :
HOUSING : HIGH TEMPERATURE THERMOPLASTIC, UL94V-0, BLACK
TERMINAL : COPPER ALLOY
FORKLOCK : COPPER ALLOY
2.PLATING :
TERMINAL :
CONTACT AREA : GOLD PLATING SPEC REFER TO CHART.
SOLDER AREA : MATTE TIN PLATING 1 MICRONS MIN.
UNDERPLATING : NICKEL PLATING 1.25 MICRONS MIN.
FORKLOCK :
MATTE TIN PLATING 1 MICRONS MIN. OVER NICKEL PLATING 1 MICRONS MIN.
3. PACKAGE: TAPE REEL, PK-47628-012.
4. PRODUCT SPEC: PS-47628-001.
5.THE PRODUCT COMPLIANT TO RoHS DIRECTIVES 2002/95/EC AND ELV 2000/53/EC.

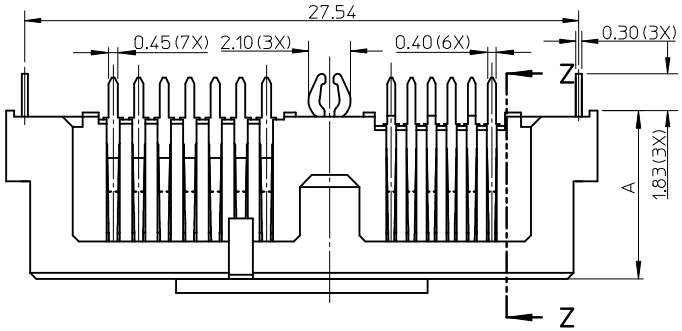

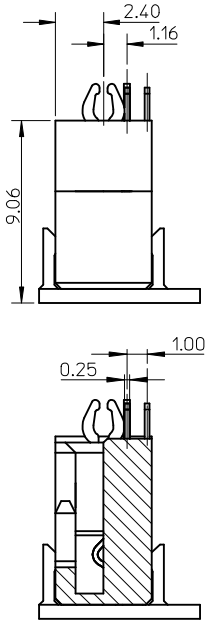

SECTION Z-Z

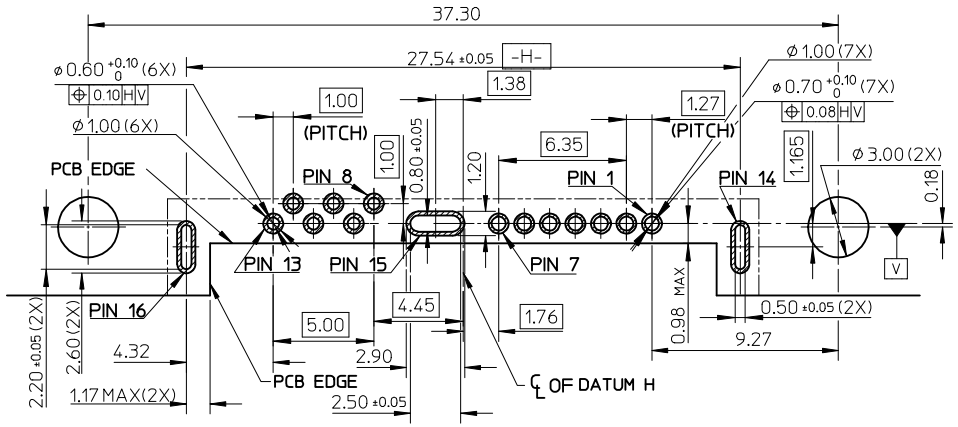

RECOMMENDED PCB LAYOUT (COMPONMENT SIDE)

PCB THICKNESS = 1.2MM ± 0.05MM

P/N	CONTACT GOLD PLATING SPEC	DIM'A'
47628-1012	0.76 MICRONS MIN	8.36
47628-1112	0.38 MICRONS MIN	
47628-1212	0.10 MICRONS MIN	
N/A		8.56
N/A		8.76
N/A		8.96
N/A		9.16
N/A		9.36
N/A		9.56
N/A		9.76
N/A		9.96
N/A		10.16
N/A		10.36
N/A		10.56
N/A		10.76
N/A		10.96

RTM
EC NO: SH2010-0070 2009/08/21
DRWN:GLI LI 2009/08/21
CH'KD:X JSONG 2009/09/23
APPR:RZHANG
DESCRIPTION
REV B

QUALITY SYMBOLS
▼=0
Ⓒ▽=0

GENERAL TOLERANCES (UNLESS SPECIFIED)

	mm	INCH
4 PLACES	± ---	± ---
3 PLACES	± ---	± ---
2 PLACES	± 0.15	± ---
1 PLACE	± 0.25	± ---
ANGULAR ± 3 °		

DRAFT WHERE APPLICABLE MUST REMAIN WITHIN DIMENSIONS

DIMENSION STYLE: MM ONLY
SCALE: 4:1
DESIGN UNITS: METRIC
THIRD ANGLE PROJECTION

DRAWN BY: DIXON LI DATE: 2008/11/27
CHECKED BY: STARY SONG DATE: 2008/11/27
APPROVED BY: HARVEY WANG DATE: 2008/11/27

TITLE: 2 PIECES SLIMLINE SATA BOTTOM MOUNT TYPE (HEADER)

MOLEX INCORPORATED

MATERIAL NO.: SEE CHART
DOCUMENT NO.: SD-47639-400
SHEET NO.: 1 OF 2
SIZE: A3

THIS DRAWING CONTAINS INFORMATION THAT IS PROPRIETARY TO MOLEX INCORPORATED AND SHOULD NOT BE USED WITHOUT WRITTEN PERMISSION

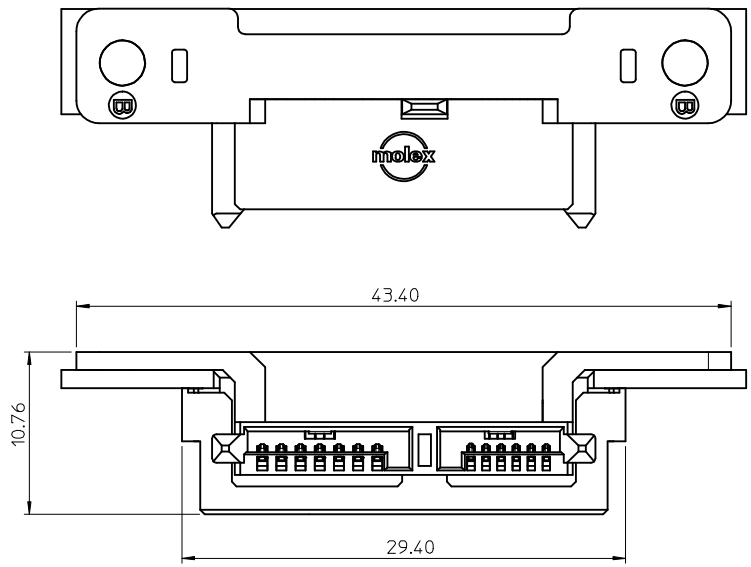

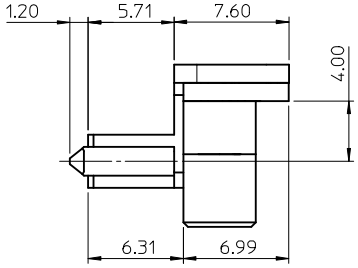

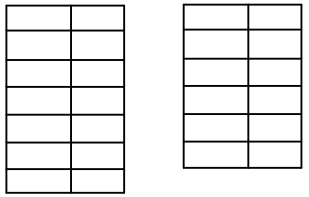

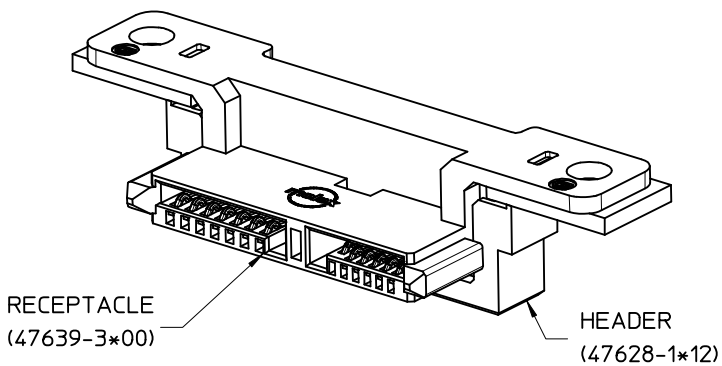

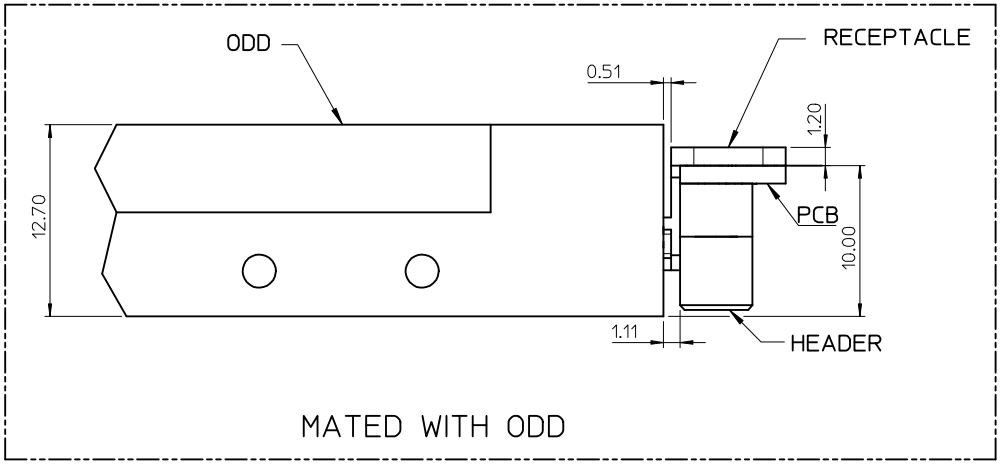

RTM EC NO: SH2010-0070 DRWN:GLLI 2009/08/21 CH'KD:XJSONG 2009/08/21 APPR:RZHANG 2009/09/23	QUALITY SYMBOLS ▼=0 C=0	GENERAL TOLERANCES (UNLESS SPECIFIED)	DIMENSION STYLE MM ONLY	SCALE 3:1	DESIGN UNITS METRIC	THIRD ANGLE PROJECTION
			DRAWN BY DIXON LI DATE 2008/11/27	TITLE 2 PIECES SLIMLINE SATA BOTTOM MOUNT TYPE (ASSEMBLY)		
			CHECKED BY STARY SONG DATE 2008/11/27			
			APPROVED BY HARVEY WANG DATE 2008/11/27	molex MOLEX INCORPORATED		
			MATERIAL NO. SEE REMARK	DOCUMENT NO. SD-47639-400	SHEET NO. 2 OF 2	
B	REV	DESCRIPTION	DRAFT WHERE APPLICABLE MUST REMAIN WITHIN DIMENSIONS	SIZE A3	THIS DRAWING CONTAINS INFORMATION THAT IS PROPRIETARY TO MOLEX INCORPORATED AND SHOULD NOT BE USED WITHOUT WRITTEN PERMISSION	

		mm	INCH			
4 PLACES		± ---	± ---			
3 PLACES		± ---	± ---			
2 PLACES		± 0.15	± ---			
1 PLACE		± 0.25	± ---			
ANGULAR ± 3 °						

tb_frame_A3_P_AM_T
Rev. E 2006/04/15