IEC Plug E, Cord Connector (Rewireable), Angled, max. Cable Diameter 8.5 mm



IEC device connector E
Rewireable connector
angled



Example with assembled cable

E



70° C

See below:
Approvals and Compliances

Description

- Cord Connectors (Rewireable) :
  Screw-on mounting
- 1 Function
- Appliance Inlet , Pin temperature 70 °C , Protection class I
- Cable

References

Substitute for type 9013

Weblinks

pdf data sheet, html datasheet, General Product Information, Approvals, Distributor-Stock-Check, Accessories, Detailed request for product

Technical Data

Ratings IEC	10 A / 250 VAC; 50 Hz
Ratings UL/CSA	15 A / 250 VAC; 60 Hz
Dielectric Strength	> 2 kVAC between L-N > 2 kVAC between L/N-PE (1 min/50 Hz)
Allowable Operation Temperature	-25 °C to 70 °C
Protection against electric shock	Suitable for appliances with protection class I acc. to IEC 61140
Terminal	Cable
Material: Housing	Thermoplastic, black, UL 94V-0

Appliance inlet/-outlet	E acc. to IEC 60320-1, UL 60320-1, CSA C22.2 no. 60320-1 (for cold conditions) pin-temperature 70 °C, 10 A, Protection Class I

Approvals and Compliances

Detailed information on product approvals, code requirements, usage instructions and detailed test conditions can be looked up in Details about Approvals

SCHURTER products are designed for use in industrial environments. They have approvals from independent testing bodies according to national and international standards. Products with specific characteristics and requirements such as required in the automotive sector according to IATF 16949, medical technology according to ISO 13485 or in the aerospace industry can be offered exclusively with customer-specific, individual agreements by SCHURTER.

Approvals

The approval mark is used by the testing authorities to certify compliance with the safety requirements placed on electronic products.

Approval Reference Type: 4733

Approval Logo	Certificates	Certification Body	Description
	VDE Approvals	VDE	VDE Certificate Number: 40010731
	UL Approvals	UL	UL File Number: E96454
	CCC Approvals	CCC	CCC Certificate Number:

Product standards

Product standards that are referenced

Organization	Design	Standard	Description
IEC	Designed according to	IEC 60320-1	Appliance couplers for household and similar general purposes
UL	Designed according to	UL 60320-1	Standard for Attachment Plugs and Receptacles
CSA Group	Designed according to	CSA C22.2 no. 60320-1	General Use Receptacles, Attachment Plugs, and Similar Wiring Devices

Application standards

Application standards where the product can be used

Organization	Design	Standard	Description
IEC	Designed for applications acc.	IEC/UL 62368-1	Audio/video, information and communication technology equipment - Part 1: Safety requirements

Compliances

The product complies with following Guide Lines

Identification	Details	Initiator	Description
CE	CE declaration of conformity	SCHURTER AG	The CE marking declares that the product complies with the applicable requirements laid down in the harmonisation of Community legislation on its affixing in accordance with EU Regulation 765/2008.
UKCA	UKCA declaration of conformity	SCHURTER AG	The UKCA marking declares that the product complies with the applicable requirements laid down in the British Amendment of Regulation (EC) 765/2008.
RoHS	RoHS	SCHURTER AG	Directive RoHS 2011/65/EU, Amendment (EU) 2015/863
50	China RoHS	SCHURTER AG	The law SJ / T 11363-2006 (China RoHS) has been in force since 1 March 2007. It is similar to the EU directive RoHS.
REACH	REACH	SCHURTER AG	On 1 June 2007, Regulation (EC) No 1907/2006 on the Registration, Evaluation, Authorization and Restriction of Chemicals 1 (abbreviated as "REACH") entered into force.

Dimensions [mm]

4733

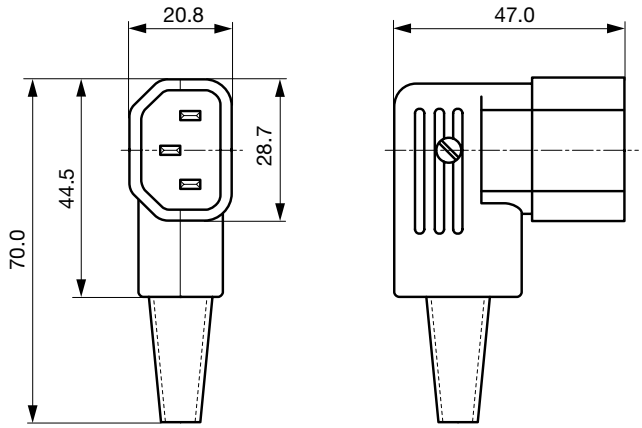

All Variants

Color	Recommended cable diameter	Max. wire size	L = Length of cable guard	Order Number
black	8.5 mm	3 x 1 mm² / 3 x 18 AWG	-	4733.0000

Most Popular.

Availability for all products can be searched real-time:https://www.schurter.com/en/Stock-Check/Stock-Check-SCHURTER

Max. torque for screws: Terminals: 0.5 Nm, Cable clamps: 0.3 Nm, Cover: 0.3 Nm

Packaging unit 100 Pcs

Mating Outlets/Connectors

Category / Description



Appliance Outlet Overview complete

6600-5, Mounting: Snap-in version, Appliance Outlet: IEC F, For PCB mounting, 10 A, Suitable for appliances with protection class I	6600-5
6600-3, Mounting: Screw-on mounting, Appliance Outlet: IEC F, Solder / Quick Connect, 10 A, Suitable for appliances with protection class I	6600-3
4787, Mounting: Screw-on mounting, Appliance Outlet: IEC Solder terminals, 10 A, Suitable for appliances with protection class I	4787
4788, Mounting: Snap-in version, Appliance Outlet: IEC Solder / Quick Connect, 10 A, Suitable for appliances with protection class I	4788
6600-4, Mounting: Snap-in version, Appliance Outlet: IEC F, Solder / Quick Connect, 10 A, Suitable for appliances with protection class I	6600-4



Appliance Outlet shuttered Overview complete

4721, Mounting: Screw-on mounting, Appliance Outlet: IEC F, Solder / Quick Connect, 10 A, Suitable for appliances with protection class I	4721
4723, Mounting: Snap-in version, Appliance Outlet: IEC F, Solder / Quick Connect, 10 A, Suitable for appliances with protection class I	4723



Connector Overview complete

4782 Mounting: Power Cord, 3 x 1 mm² / 3 x 18 AWG, Cable, Connector: IEC C13	4782
4785 Mounting: Power Cord, 3 x 1 mm² / 3 x 18 AWG, Cable, Connector: IEC C13	4785
4300-06 Mounting: Power Cord, 3 x 1 mm² / 3 x 18 AWG, Cable, Connector: IEC C13	4300-06
4781 Mounting: Power Cord, Cable, Connector: IEC C15	4781
4784 Mounting: Power Cord, 3 x 1 mm² / 3 x 18 AWG, Cable, Connector: IEC C15	4784
	...



Distribution Unit Overview complete

4751, Mounting: Snap-in, Front Side, Solder pin / quick connect terminals 6.3 x 0.8 / 4.8 x 0.8 mm, x Appliance Outlet: IEC F	4751
0712-PQ, Mounting: Snap-in, Front Side, Solder terminal (4.8 x 0.8 mm), 1x Appliance Outlet: IEC F	0712
4741, Mounting: 2x Appliance Outlet: IEC F	4741
0909, Mounting: Snap-in, Front Side, Solder terminals, 7x Appliance Outlet: IEC F	0909
4752, Mounting: Snap-in, Front Side, Solder / Quick Connect, 4x Appliance Outlet: IEC F	4752
	...



Power Entry Module Overview complete

IEC Appliance Inlet C14 with Appliance Outlet F	KP (Outlet)
Felcom 64, Mounting: 0 mm, Fuseholder: Solder terminals 3.5 x 0.8 mm / quick connect terminals 6.3 x 0.8 mm, Rocker switch: 2-pole non-illuminated, Appliance Inlet: IEC C14, Power Entry Module	Felcom 64
4719, Mounting: Snap-in, mm, Fuseholder: 1-pole, Appliance Outlet: IEC F, with or without neon indicator, Suitable for appliances with protection class I	4719

Category / Description



Power Entry Module with line filter Overview complete

Felcom 54, Mounting: mm, Front Side, Filter: Standard version, Fuseholder: 1-/2-pole, Front Side, 10 A, Rocker switch: 2-pole, Solder terminals 3.5 x 0.8 mm / quick connect terminals 6.3 x 0.8 mm, Appliance Inlet: IEC C14	Felcom 54

10.12.2021

The specifications, descriptions and illustrations indicated in this document are based on current information. All content is subject to modifications and amendments. Information furnished is believed to be accurate and reliable. However, users should independently evaluate the suitability and test each product selected for their own applications.