This document was generated on 05/19/2010

PLEASE CHECK WWW.MOLEX.COM FOR LATEST PART INFORMATION

Part Number: 0472720021
Status: Active
Overview: displayport
Description: 0.50mm (.020") Pitch DisplayPort* Male Receptacle, Right Angle, SMT, Gold (Au) Flash Plating, 20 Circuits, without Cover, Flange, or Mylar; with Latch Holes, Peg and Solder Tab of Shell, Leadfree



Series image - Reference only

Documents:
3D Model
Drawing (PDF)
RoHS Certificate of Compliance (PDF)

Agency Certification

UL	E29179

General

Product Family	I/O Connectors
Series	47272
Application	Wire-to-Board
Comments	With EMI Shield
Component Type	Receptacle
Overview	displayport
Product Name	DisplayPort*
Type	N/A

Physical

Boot Color	N/A
Circuits (Loaded)	20
Circuits (maximum)	20
Color - Resin	Black
Flammability	94V-0
Gender	Male
Keying to Mating Part	Yes
Lock to Mating Part	Yes
Material - Metal	Copper Alloy
Material - Plating Mating	Gold
Material - Plating Termination	Tin-Bismuth
Material - Resin	High Temperature Thermoplastic
Number of Rows	2
Orientation	Right Angle
PCB Locator	Yes
PCB Retention	Yes
Packaging Type	Embossed Tape on Reel
Panel Mount	Without Flange
Pitch - Mating Interface (in)	0.039 In
Pitch - Mating Interface (mm)	0.50 mm
Pitch - Term. Interface (in)	0.039 In
Pitch - Term. Interface (mm)	0.50 mm
Plating min: Mating (µin)	2
Plating min: Mating (µm)	0.05
Plating min: Termination (µin)	40
Plating min: Termination (µm)	1
Polarized to Mating Part	Yes
Polarized to PCB	Yes
Ports	1
Temperature Range - Operating	-20°C to +85°C
Termination Interface: Style	Surface Mount

EU RoHS
ELV and RoHS Compliant
REACH SVHC
Not Reviewed
Halogen-Free Status
Not Reviewed

China RoHS

Need more information on product environmental compliance?

Email productcompliance@molex.com
For a multiple part number RoHS Certificate of Compliance, click here

Please visit the Contact Us section for any non-product compliance questions.

Search Parts in this Series
47272Series

Mates With
47271 Plug Sub-Assemblies, 68783 Cable Series

Waterproof / Dustproof	No

Electrical

Current - Maximum per Contact	0.5A
Grounding to Panel	Yes
Shielded	Yes
Voltage - Maximum	40V AC

Material Info

Reference - Drawing Numbers

Packaging Specification	PK-47272-001
Sales Drawing	SD-47272-001

* DisplayPort is a Trademark of VESA

This document was generated on 05/19/2010

PLEASE CHECK WWW.MOLEX.COM FOR LATEST PART INFORMATION

NOTES:

1. MATERIAL:
   HOUSING: HGIH TEMPERATURE THERMAL PLASTIC, BLACK, 30% GLASS FILLED, UL94V-0.
   TERMINAL: COPPER ALLOY.
   SHELL: COPPER ALLOY.
2. PLATING:
   TERMINAL: CONTACT AREA(1)0.76 MICROMETER GOLD PLATING
   (2)0.38 MICROMETER GOLD PLATING
   (3)GOLD FLASH PLATING
   (4)0.64MIN. MICROMETER PALLADIUM/NICKEL AND GOLD FLASH PLATING
   AND SOLDER TAIL 1~3 MICROMETER TIN BISMUTH UNDER PLATE1~3 MICROMETER NICKEL PLATING OVERALL.
   SHELL:(a)1.27~2.54 MICROETER SOLDERABLE NICKEL PLATING OVERALL.
   (b)SHEEL PEG SOLDERING SURFACE PLATE GOLD FLASH UNDER PLATE1~3 MICROMETER NICKEL PLATING OVERALL.
   (c) SHELL PLATE 2.1~3.0 MICROMETER TIN UNDER PLATE1.27~2.25 MICROERER NICKEL OVERALL
3. SOLDERTAIL COPLANARITY 0.10 MAX.
4. PS REFER TO PS-47272-001

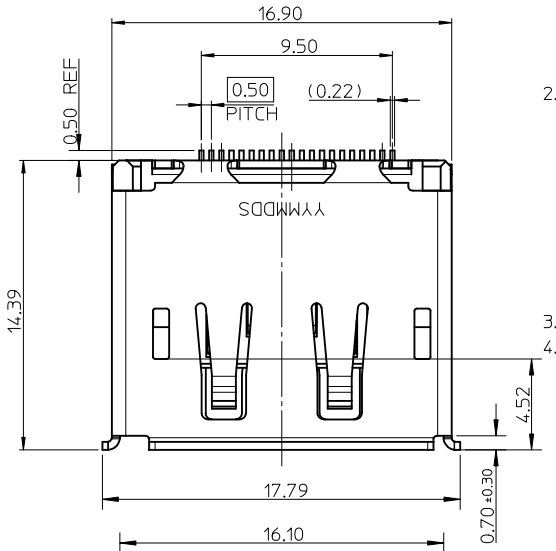

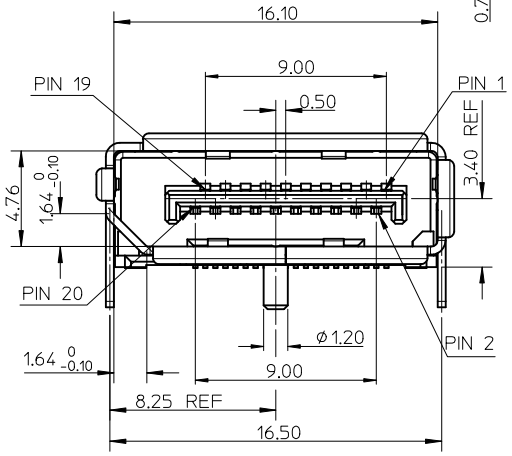

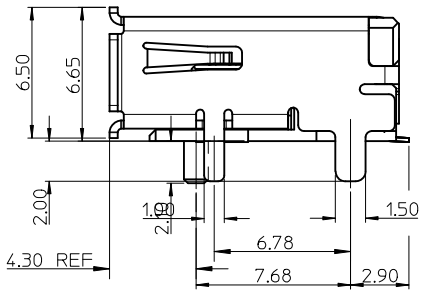

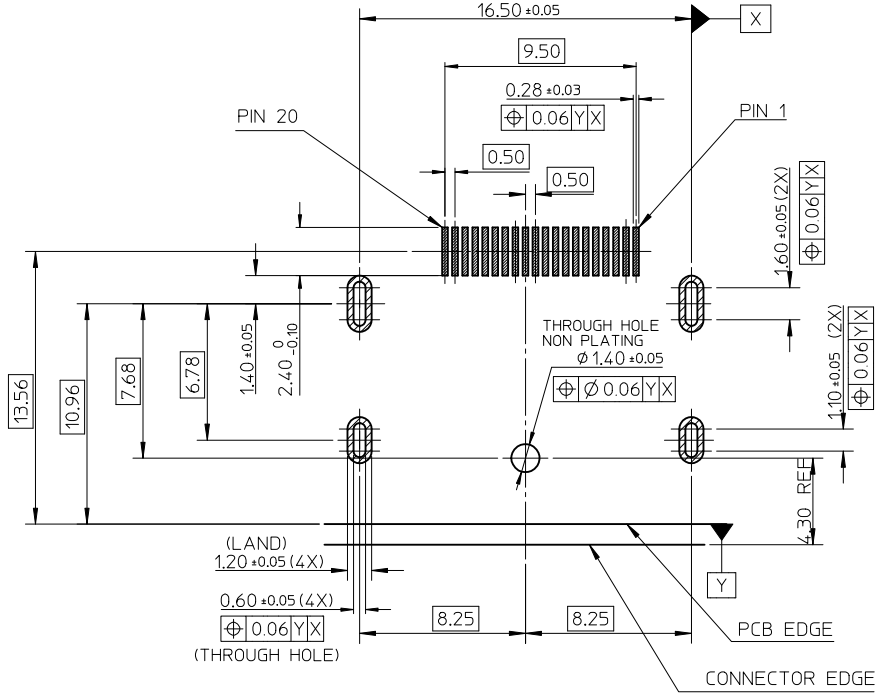

RECOMMENDED PCB LAYOUT(THICKNESS=1.6±0.15)

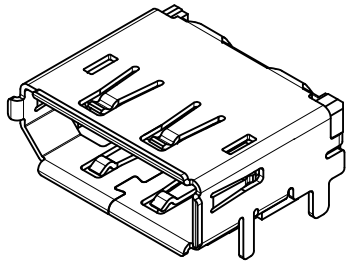

REVISED				REV
EC NO: SH2010-0353	DRWN:HHE	CH'KD:FYANG05	APPR:RZHANG	DESCRIPTION
2010/03/08	2010/03/24	2010/03/29		
B				

QUALITY SYMBOLS
F_A=0
F_C=0
F_P=0

GENERAL TOLERANCES (UNLESS SPECIFIED)	mm	INCH
4 PLACES	± ---	± ---
3 PLACES	± ---	± ---
2 PLACES	± 0.25	± ---
1 PLACE	± 0.25	± ---
ANGULAR ± 3 °		

DRAFT WHERE APPLICABLE MUST REMAIN WITHIN DIMENSIONS

DIMENSION STYLE	MM ONLY
SCALE	1:1
DESIGN UNITS	METRIC
	THIRD ANGLE PROJECTION
DRAWN BY	RZHANG
DATE	2005/07/01
CHECKED BY	IWANG
DATE	2005/07/01
APPROVED BY	RZHANG
DATE	2010/03/26
MATERIAL NO.	SEE SHEET5
TITLE	1.0MM PITCH DISPLAY PORT RECEPTACLE ASSEMBLY
	MOLEX INCORPORATED
DOCUMENT NO.	SD-47272-001
SHEET NO.	1 OF 8
SIZE	A3

THIS DRAWING CONTAINS INFORMATION THAT IS PROPRIETARY TO MOLEX INCORPORATED AND SHOULD NOT BE USED WITHOUT WRITTEN PERMISSION

WITH COVER

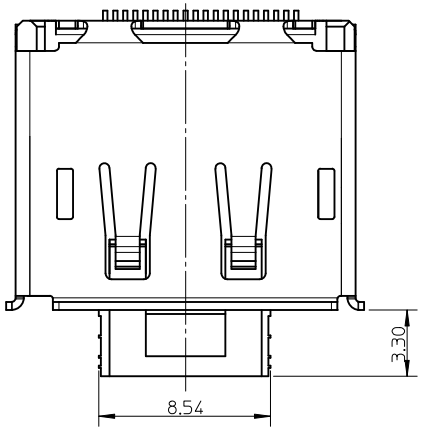

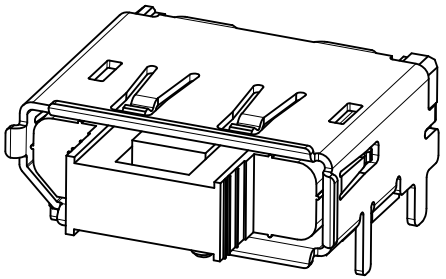

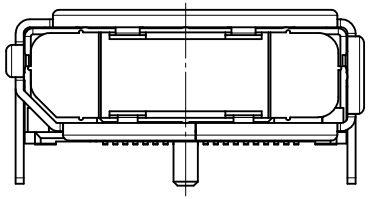

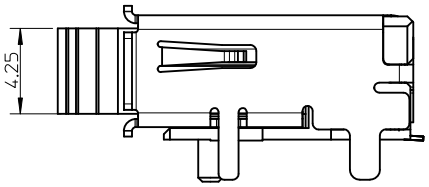

NOTES:
1.UNSPECIFICED DIMENSION ARE SAME AS SHEET1
2.CONNECTOR WITH COVER IS USED FOR WARE SOLDERING PEG

WITHOUT LATCH HOLE

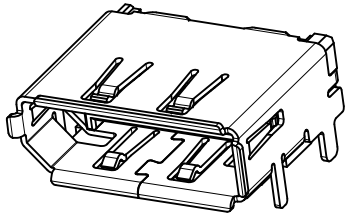

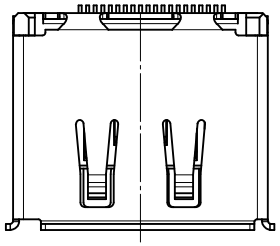

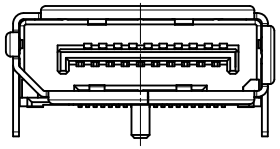

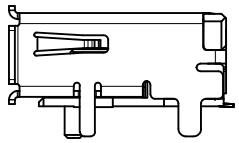

NOTES:
1.UNSPECIFICED DIMENSION ARE SAME AS SHEET1

WITH COVER AND MYLAR

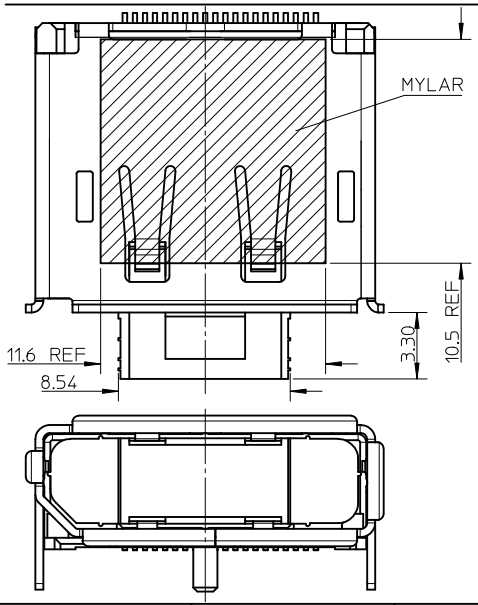

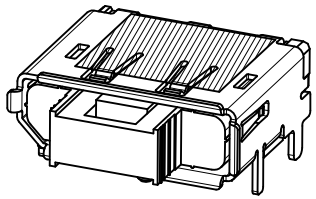

NOTES:
1.UNSPECIFICED DIMENSION ARE SAME AS SHEET1
2.CONNECTOR WITH COVER IS USED FOR WARE SOLDERING PEG

REVISED			
EC NO: SH2010-0353	2010/03/08		
DRWN:HHE	2010/03/24		
CH'KD:FYANG05	2010/03/29		
APPR:RZHANG		DESCRIPTION	
B		REV	

QUALITY SYMBOLS
FA=0
FC=0
FP=0

GENERAL TOLERANCES (UNLESS SPECIFIED)

	mm	INCH
4 PLACES	± ---	± ---
3 PLACES	± ---	± ---
2 PLACES	± 0.25	± ---
1 PLACE	± 0.25	± ---
ANGULAR ± 3 °		

DRAFT WHERE APPLICABLE MUST REMAIN WITHIN DIMENSIONS

DIMENSION STYLE	MM ONLY
SCALE	1:1
DESIGN UNITS	METRIC
	THIRD ANGLE PROJECTION
DRAWN BY	RZHANG
DATE	2005/07/01
CHECKED BY	IWANG
DATE	2005/07/01
APPROVED BY	RZHANG
DATE	2010/03/26
MATERIAL NO.	SEE SHEET5
TITLE	1.0MM PITCH DISPLAY PORT RECEPTACLE ASSEMBLY
	MOLEX INCORPORATED
DOCUMENT NO.	SD-47272-001
SHEET NO.	2 OF 8
SIZE	A3

THIS DRAWING CONTAINS INFORMATION THAT IS PROPRIETARY TO MOLEX INCORPORATED AND SHOULD NOT BE USED WITHOUT WRITTEN PERMISSION

WITH FLANGE AND THROUGH HOLE PEG

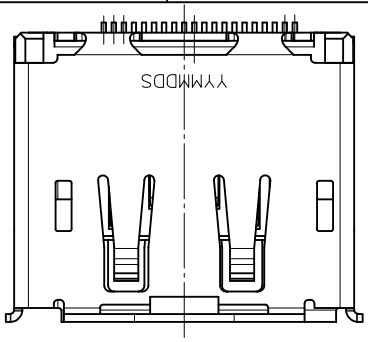

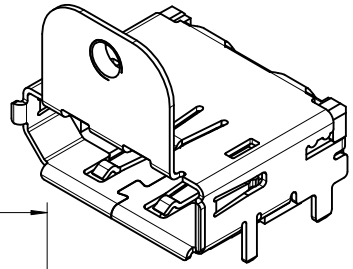

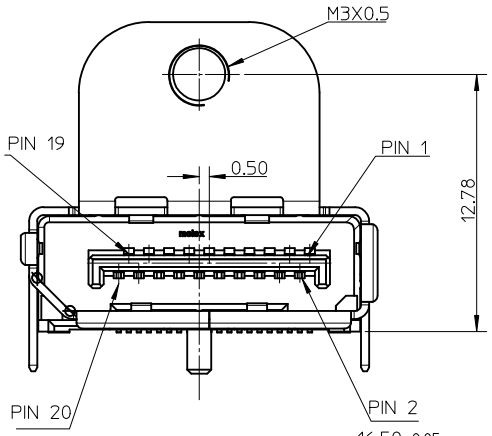

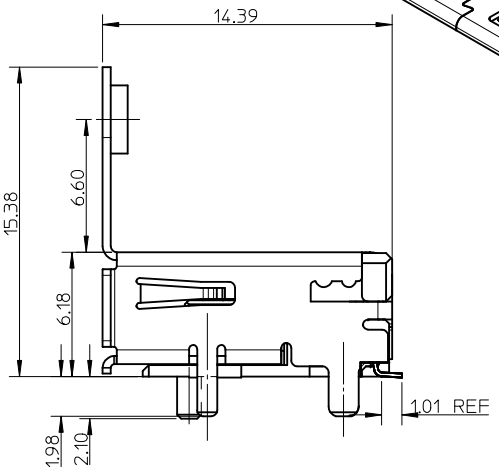

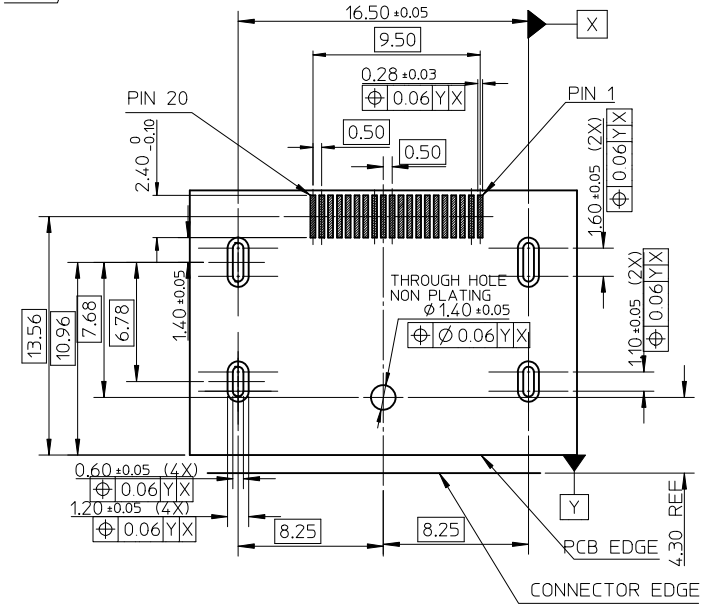

RECOMMENDED PCB LAYOUT(THICKNESS=1.6±0.15)

NOTES:
UNSPECIFICED DIMENSION ARE SAME AS SHEET1

WITH MYLAR

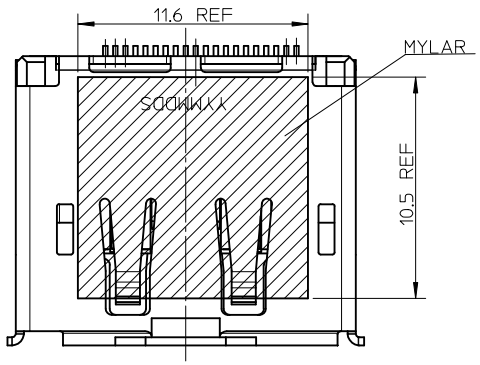

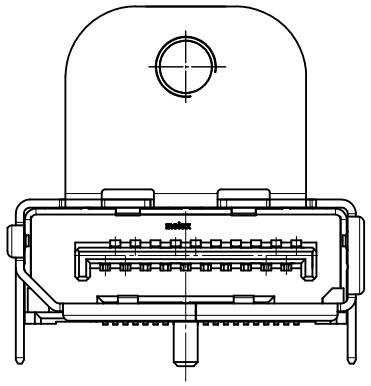

NOTES:
UNSPECIFICED DIMENSION ARE SAME AS SHEET1

REVISED				REV
EC NO: SH2010-0353	2010/03/08			B
DRWN:HHE	2010/03/24			
CHKD:FYANG05	2010/03/29			
APPR:RZHANG				

QUALITY SYMBOLS
FA=0
FC=0
FP=0

GENERAL TOLERANCES (UNLESS SPECIFIED)

	mm	INCH
4 PLACES	± ---	± ---
3 PLACES	± ---	± ---
2 PLACES	± 0.25	± ---
1 PLACE	± 0.25	± ---
ANGULAR ± 3 °		

DRAFT WHERE APPLICABLE MUST REMAIN WITHIN DIMENSIONS

DIMENSION STYLE: MM ONLY
SCALE: 1:1
DESIGN UNITS: METRIC
THIRD ANGLE PROJECTION

DRAWN BY	RZHANG
DATE	2005/07/01
CHECKED BY	IWANG
DATE	2005/07/01
APPROVED BY	RZHANG
DATE	2010/03/26
MATERIAL NO.	SEE SHEET5
DOCUMENT NO.	SD-47272-001
SHEET NO.	3 OF 8

TITLE: 1.0MM PITCH DISPLAY PORT RECEPTACLE ASSEMBLY

MOLEX INCORPORATED

SIZE A3

THIS DRAWING CONTAINS INFORMATION THAT IS PROPRIETARY TO MOLEX INCORPORATED AND SHOULD NOT BE USED WITHOUT WRITTEN PERMISSION

WITH FLANGE AND SMT PEG

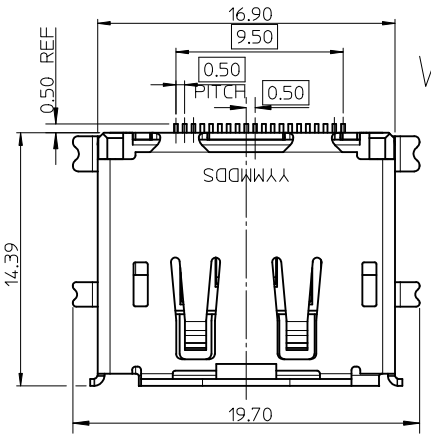

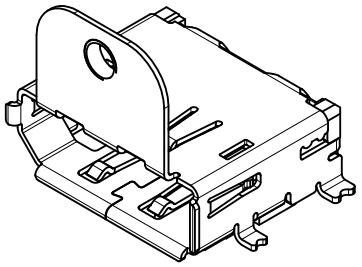

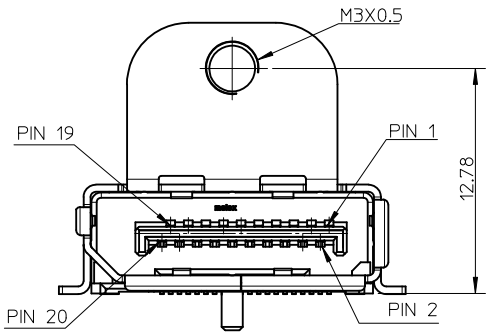

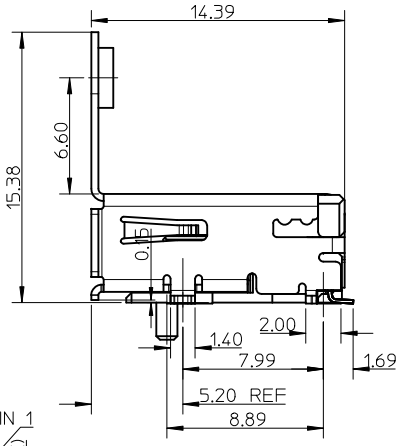

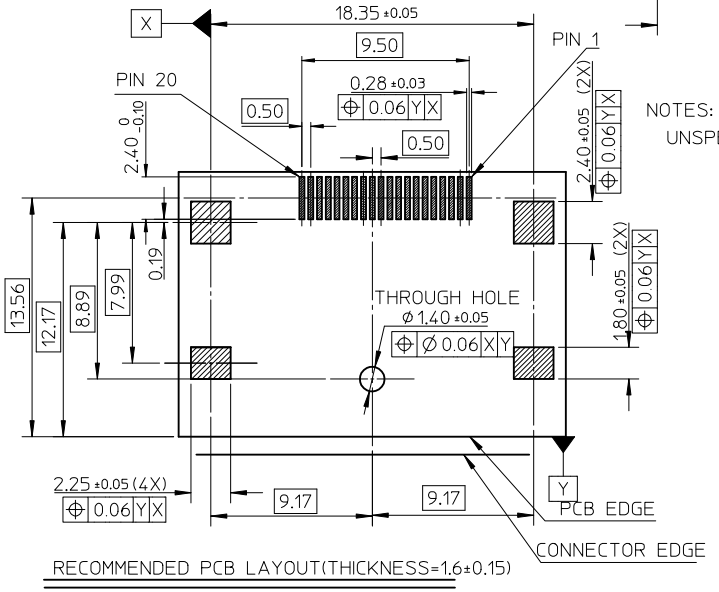

RECOMMENDED PCB LAYOUT(THICKNESS=1.6±0.15)

NOTES:
UNSPECIFICED DIMENSION ARE SAME AS SHEET1

WITH FLANGE AND MYLAR

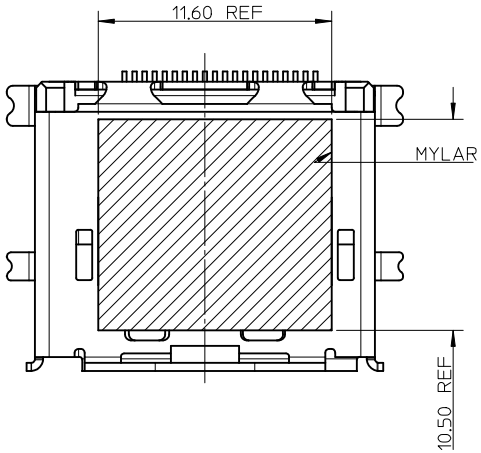

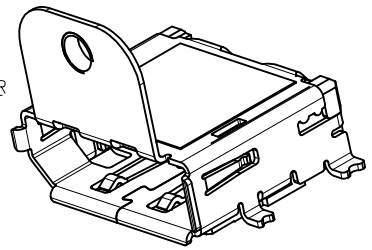

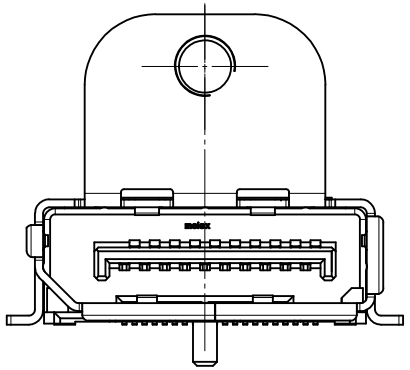

NOTES:
1.UNSPECIFICED DIMENSION ARE SAME AS SHEET1
2.THE RECOMMENDER PCB ARE SAME AS LEFT RECMMENDER PCB

REVISED				REV
EC NO: SH2010-0353	2010/03/08	DRWN:HHE	2010/03/24	B
CH'KD:FYANG05	2010/03/29	APPR:RZHANG		

QUALITY SYMBOLS
F_A=0
F_C=0
F_P=0

GENERAL TOLERANCES (UNLESS SPECIFIED)

	mm	INCH
4 PLACES	± ---	± ---
3 PLACES	± ---	± ---
2 PLACES	± 0.25	± ---
1 PLACE	± 0.25	± ---
ANGULAR ± 3 °		

DRAFT WHERE APPLICABLE MUST REMAIN WITHIN DIMENSIONS

DIMENSION STYLE: MM ONLY
SCALE: 1:1
DESIGN UNITS: METRIC
THIRD ANGLE PROJECTION

DRAWN BY	RZHANG
DATE	2005/07/01
CHECKED BY	IWANG
DATE	2005/07/01
APPROVED BY	RZHANG
DATE	2010/03/26
MATERIAL NO.	SEE SHEET5
DOCUMENT NO.	SD-47272-001
SHEET NO.	4 OF 8
SIZE	A3

TITLE: 1.0MM PITCH DISPLAY PORT RECEPTACLE ASSEMBLY

MOLEX INCORPORATED

THIS DRAWING CONTAINS INFORMATION THAT IS PROPRIETARY TO MOLEX INCORPORATED AND SHOULD NOT BE USED WITHOUT WRITTEN PERMISSION

ASSEMBLY NO.	WITH COVER	WITH FLANGE	SMT PEG OF SHELL	THROUGH HOLE PEG OF SHELL	PLATING IN CONTACT AREA	SHELL PLATING	WITH LATCH HOLE	MYLAR	POST	PACKAGE METHOD	REMARK
47272-0001	WITHOUT	WITHOUT		WITH	SEE NOTE2(1)	SEE NOTE2(a)	WITH	WITHOUT	WITH		
47272-0002	WITHOUT	WITHOUT		WITH	SEE NOTE2(1)	SEE NOTE2(a)	WITH	WITHOUT	WITH		WITH EMI SHELL FOR SHEET 1
47272-0011	WITHOUT	WITHOUT		WITH	SEE NOTE2(2)	SEE NOTE2(a)	WITH	WITHOUT	WITH		
47272-0021	WITHOUT	WITHOUT		WITH	SEE NOTE2(3)	SEE NOTE2(a)	WITH	WITHOUT	WITH		
47272-0003	WITHOUT	WITHOUT		WITH	SEE NOTE2(1)	SEE NOTE2(a)	WITHOUT	WITHOUT	WITH		FOR SHEET 2
47272-1002	WITH	WITHOUT		WITH	SEE NOTE2(1)	SEE NOTE2(a)	WITH	WITHOUT	WITH		
47272-0012	WITH	WITHOUT		WITH	SEE NOTE2(2)	SEE NOTE2(a)	WITH	WITHOUT	WITH		
47272-0022	WITH	WITHOUT		WITH	SEE NOTE2(3)	SEE NOTE2(a)	WITH	WITHOUT	WITH		
47272-0024	WITH	WITHOUT		WITH	SEE NOTE2(1)	SEE NOTE2(a)	WITH	WITH	WITH		
47272-0004	WITH	WITH		WITH	SEE NOTE2(1)	SEE NOTE2(c)	WITH	WITHOUT	WITH		FOR SHEET 3
47272-1004	WITHOUT	WITH		WITH	SEE NOTE2(1)	SEE NOTE2(c)	WITH	WITHOUT	WITH		
47272-0025	WITHOUT	WITH		WITH	SEE NOTE2(1)	SEE NOTE2(c)	WITH	WITH	WITH		
47272-0028	WITHOUT	WITH		WITH	SEE NOTE2(3)	SEE NOTE2(c)	WITH	WITH	WITH		
47272-1005	WITHOUT	WITH	SMT PEG		SEE NOTE2(1)	SEE NOTE2(c)	WITH	WITHOUT	WITH		FOR SHEET 4
47272-0023	WITHOUT	WITH	SMT PEG		SEE NOTE2(1)	SEE NOTE2(c)	WITH	WITH	WITH		
47272-0026	WITHOUT	WITHOUT		WITH	SEE NOTE2(1)	SEE NOTE2(a)	WITH	WITHOUT	WITHOUT		FOR SHEET 6
47272-0027	WITH	WITH		WITH	SEE NOTE2(1)	SEE NOTE2(c)	WITH	WITH	WITH		FOR SHEET 7
47272-0201	WITHOUT	WITHOUT		WITH	SEE NOTE2(4)	SEE NOTE2(a)	WITH	WITHOUT	WITH		FOR SHEET 1
47272-0029	WITHOUT	WITHOUT		WITH	SEE NOTE2(1)	SEE NOTE2(a)	WITH	WITH	WITH		FOR SHEET 8

REVISED
EC NO: SH2010-0353 2010/03/08
DRWN:HHE 2010/03/24
CH'KD:FYANG05 2010/03/29
APPR:RZHANG
DESCRIPTION
B
REV

QUALITY SYMBOLS
$\sqrt{F_A}$=0
$\sqrt{F_C}$=0
$\sqrt{F_P}$=0

GENERAL TOLERANCES (UNLESS SPECIFIED)

	mm	INCH
4 PLACES	± ---	± ---
3 PLACES	± ---	± ---
2 PLACES	± 0.25	± ---
1 PLACE	± 0.25	± ---
ANGULAR ± 3 °		

DRAFT WHERE APPLICABLE MUST REMAIN WITHIN DIMENSIONS

DIMENSION STYLE: MM ONLY
SCALE: 1:1
DESIGN UNITS: METRIC
THIRD ANGLE PROJECTION

DRAWN BY: RZHANG DATE: 2005/07/01
CHECKED BY: IWANG DATE: 2005/07/01
APPROVED BY: RZHANG DATE: 2010/03/26

TITLE: 1.0MM PITCH DISPLAY PORT RECEPTACLE ASSEMBLY

molex MOLEX INCORPORATED

MATERIAL NO.: SEE CHART
DOCUMENT NO.: SD-47272-001
SHEET NO.: 5 OF 8

SIZE: A3

THIS DRAWING CONTAINS INFORMATION THAT IS PROPRIETARY TO MOLEX INCORPORATED AND SHOULD NOT BE USED WITHOUT WRITTEN PERMISSION

WITHOUT POST

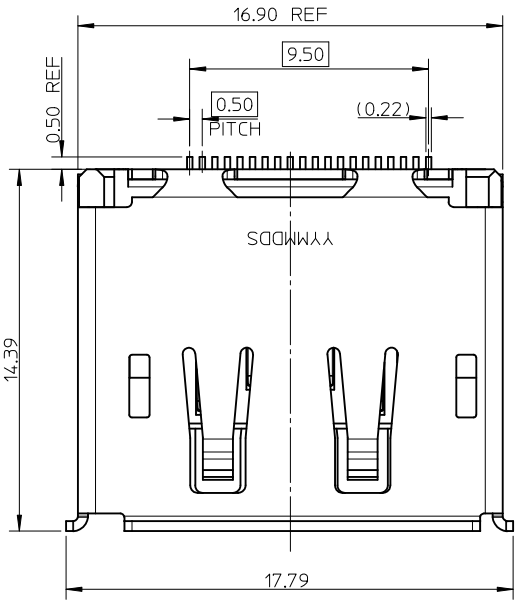

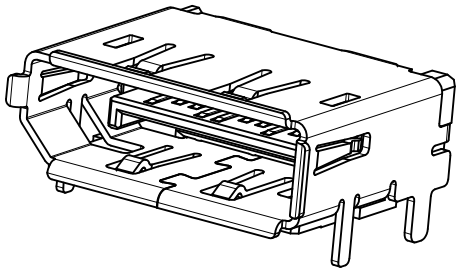

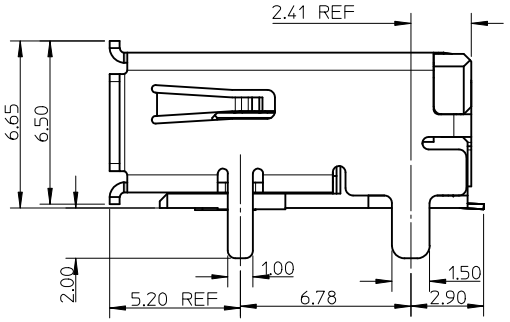

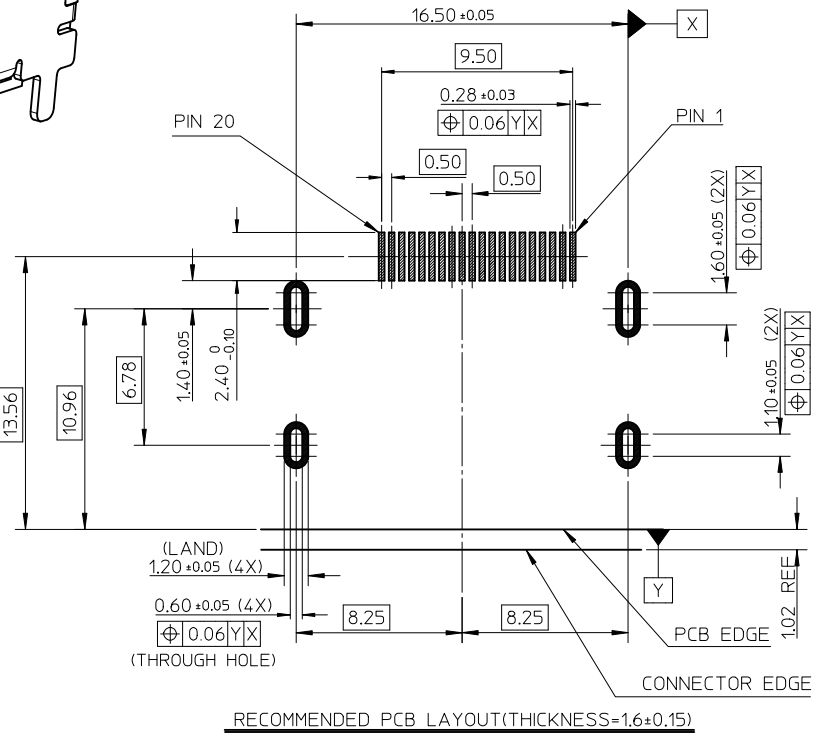

RECOMMENDED PCB LAYOUT(THICKNESS=1.6±0.15)

NOTES:
UNSPECIFICED DIMENSION ARE SAME AS SHEET1

REVISED
EC NO: SH2010-0353 2010/03/08
DRWN:HHE 2010/03/24
CH'KD:FYANG05 2010/03/29
APPR:RZHANG
DESCRIPTION
B
REV

QUALITY SYMBOLS
FV=0
FC=0
FP=0

GENERAL TOLERANCES (UNLESS SPECIFIED)

	mm	INCH
4 PLACES	± ---	± ---
3 PLACES	± ---	± ---
2 PLACES	± 0.25	± ---
1 PLACE	± 0.25	± ---
ANGULAR ± 3 °		

DRAFT WHERE APPLICABLE MUST REMAIN WITHIN DIMENSIONS

DIMENSION STYLE	MM ONLY
SCALE	1:1
DESIGN UNITS	METRIC
	THIRD ANGLE PROJECTION
DRAWN BY	RZHANG
DATE	2005/07/01
CHECKED BY	IWANG
DATE	2005/07/01
APPROVED BY	RZHANG
DATE	2010/03/26
MATERIAL NO.	SEE SHEET5
TITLE	1.0MM PITCH DISPLAY PORT RECEPTACLE ASSEMBLY
	MOLEX INCORPORATED
DOCUMENT NO.	SD-47272-001
SHEET NO.	6 OF 8
SIZE	A3

THIS DRAWING CONTAINS INFORMATION THAT IS PROPRIETARY TO MOLEX INCORPORATED AND SHOULD NOT BE USED WITHOUT WRITTEN PERMISSION

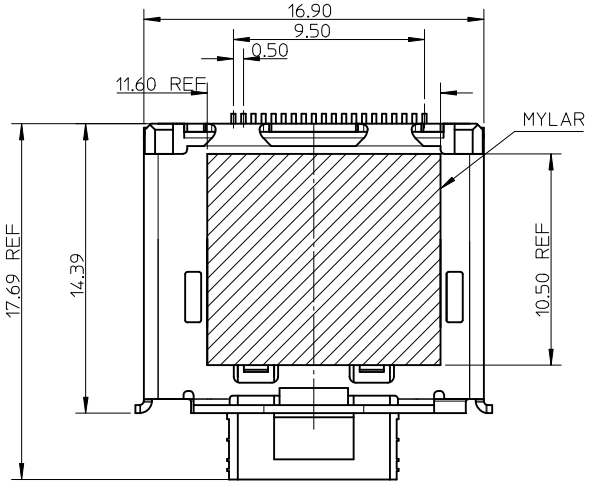

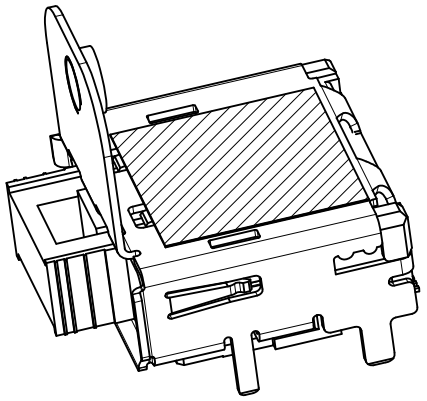

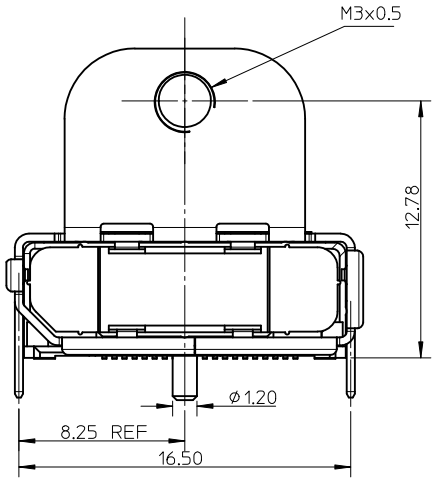

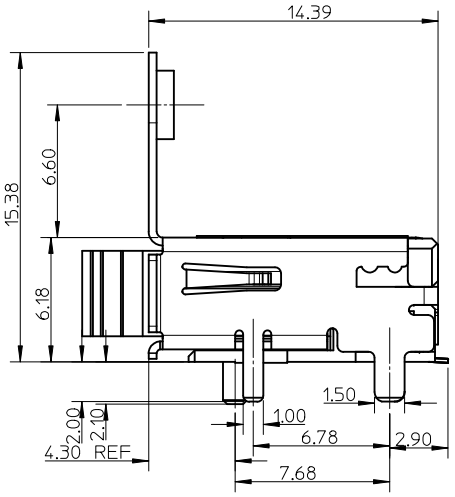

NOTES:
1. UNSPECAFIC DIMENSION ARE SAME AS SHEET1
2. THE RECOMMENDER PCB ARE SAME AS SHEET1

REVISED	EC NO: SH2010-0353	2010/03/08	DESCRIPTION
	DRWN:HHE	2010/03/24	
	CH'KD:FYANG05	2010/03/29	
	APPR:RZHANG		
B			REV

QUALITY SYMBOLS
F_A=0
F_C=0
F_P=0

GENERAL TOLERANCES (UNLESS SPECIFIED)

	mm	INCH
4 PLACES	± ---	± ---
3 PLACES	± ---	± ---
2 PLACES	± 0.25	± ---
1 PLACE	± 0.25	± ---
ANGULAR ± 3 °		

DRAFT WHERE APPLICABLE MUST REMAIN WITHIN DIMENSIONS

DIMENSION STYLE	MM ONLY
SCALE	1:1
DESIGN UNITS	METRIC
	THIRD ANGLE PROJECTION
DRAWN BY	RZHANG
DATE	2005/07/01
CHECKED BY	IWANG
DATE	2005/07/01
APPROVED BY	RZHANG
DATE	2010/03/26
MATERIAL NO.	SEE SHEET5
TITLE	1.0MM PITCH DISPLAY PORT RECEPTACLE ASSEMBLY
	MOLEX INCORPORATED
DOCUMENT NO.	SD-47272-001
SHEET NO.	7 OF 8
SIZE	A3

THIS DRAWING CONTAINS INFORMATION THAT IS PROPRIETARY TO MOLEX INCORPORATED AND SHOULD NOT BE USED WITHOUT WRITTEN PERMISSION

STANDARD TYPE WITH MYLAR

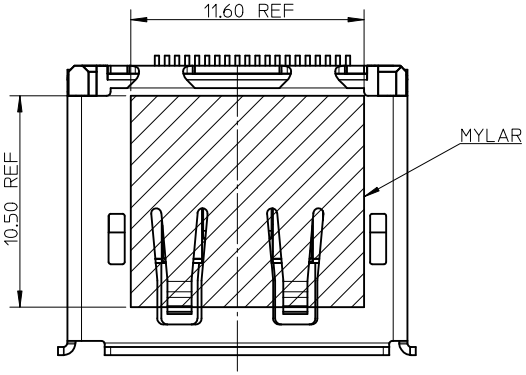

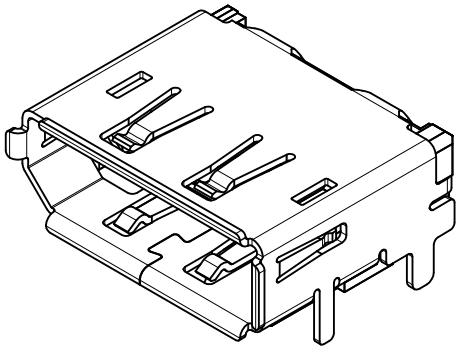

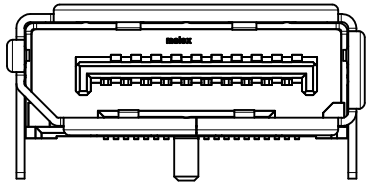

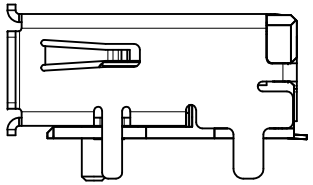

NOTES:
1. UNSPECAFIC DIMENSION ARE SAME AS SHEET1
2. THE RECOMMENDER PCB ARE SAME AS SHEET1

REVISED				REV
EC NO: SH2010-0353	DRWN:HHE	CH'KD:FYANG05	APPR:RZHANG	DESCRIPTION
2010/03/08	2010/03/24	2010/03/29		
B				

QUALITY SYMBOLS
FA=0
FC=0
FP=0

GENERAL TOLERANCES (UNLESS SPECIFIED)

	mm	INCH
4 PLACES	± ---	± ---
3 PLACES	± ---	± ---
2 PLACES	± 0.25	± ---
1 PLACE	± 0.25	± ---
ANGULAR ± 3 °		

DRAFT WHERE APPLICABLE MUST REMAIN WITHIN DIMENSIONS

DIMENSION STYLE: MM ONLY
SCALE: 4:1
DESIGN UNITS: METRIC
THIRD ANGLE PROJECTION

DRAWN BY	RZHANG	DATE 2005/07/01
CHECKED BY	IWANG	DATE 2005/07/01
APPROVED BY	RZHANG	DATE 2010/03/26

TITLE: 1.0MM PITCH DISPLAY PORT RECEPTACLE ASSEMBLY

MOLEX INCORPORATED

MATERIAL NO.: SEE SHEET5
DOCUMENT NO.: SD-47272-001
SHEET NO.: 8 OF 8
SIZE: A3

THIS DRAWING CONTAINS INFORMATION THAT IS PROPRIETARY TO MOLEX INCORPORATED AND SHOULD NOT BE USED WITHOUT WRITTEN PERMISSION