IEC Appliance Outlet J, Snap-in Mounting, Front Side, IDC Terminal, integrated Light Pipe, Color Coding

Arrangement "along", white
(wires along to pin axis)

Arrangement "cross", grey
(wires cross to pin axis)

Arrangement "cross", black
(wires cross to pin axis)

Order required accessories separately

type J

70° C

See below:
Approvals and Compliances

Description

- Panel mount :
  Snap-in version , from front side
- Connector , Pin temperature 70 °C , Protection class I
- Wire gauge 10AWG/6.0mm², 12AWG/4.0mm², 2.5mm²
- Light Pipe as an accessory, has to be ordered seperately
- Live contact as PCB terminal
- Protection cover can be used as wire press
- IDC terminals acc. to IEC 60998-2-3 for solid wires

Unique Selling Proposition

- Reduces labor costs
- Allows wiring of multiple terminals at once
- Light pipe for status indication
- V-Lock cord retaining standard

Other versions on request

- Other panel thickness
- Live contact also available as IDC, solder or quick connect terminal
- Samples available in grey and white

References

Alternative: version for 10 A (15 A) 6610-5
Alternative: version without light pipe 4710

Weblinks

pdf datasheet, html-datasheet, General Product Information, Distributor-Stock-Check, Accessories, Mounting instruction, Detailed request for product, Microsite, Landing Page, Video

The integration of light pipes in the appliance outlet provides status indication in smart PDUs. See PDU Landing Page for more information.
Power Distribution Units

Technical Data

Ratings IEC	16 A / 250 VAC; 50 Hz
Ratings UL/CSA	20 A / 250 VAC; 60 Hz
Dielectric Strength	> 2.5 kVAC between L-N > 1.5 kVAC between L/N-PE (1 min/50 Hz)
Allowable Operation Temperature	-25 °C to 70 °C
Insulation cover	Suitable for appliances with protection class I acc. to IEC 61140
Terminal	IDC terminals
Panel Thickness S	1/1.2/1.5/2/2.5/3 mm
Material: Housing	Thermoplastic, UL 94V-0

appliance inlet/-outlet	type J acc. to IEC 60320-3 UL 60320-1, CSA C22.2 no. 60320-1 (for cold conditions) pin-temperature 70 °C, Protection Class I

Approvals and Compliances

Detailed information on product approvals, code requirements, usage instructions and detailed test conditions can be looked up in Details about Approvals

Approvals

The approval mark is used by the testing authorities to certify compliance with the safety requirements placed on electronic products.
Approval Reference Type: 4710-5

Approval Logo	Certificates	Certification Body	Description
10	VDE Approvals	VDE	Certificate Number: 40042639
c US	UL Approvals	UL	UL File Number: E103791
	CQC Approvals	CQC	CCC Certificate Number: 2018180204005080

Product standards

Product standards that are referenced

Organization	Design	Standard	Description
IEC	Designed according to	IEC 60320-1	Appliance couplers for household and similar general purposes
IEC	Designed according to	IEC 60320-3	Appliance couplers for household and similar general purposes
UL	Designed according to	UL 60320-1	Standard for Attachment Plugs and Receptacles
CSA Group	Designed according to	CSA C22.2 no. 60320-1	General Use Receptacles, Attachment Plugs, and Similar Wiring Devices

Application standards

Application standards where the product can be used

Organization	Design	Standard	Description
IEC	Designed for applications acc.	IEC/UL 60950	IEC 60950-1 includes the basic requirements for the safety of information technology equipment.

Compliances

The product complies with following Guide Lines

Identification	Details	Initiator	Description
RoHS	RoHS	SCHURTER AG	EU Directive RoHS 2011/65/EU
	China RoHS	SCHURTER AG	The law SJ / T 11363-2006 (China RoHS) has been in force since 1 March 2007. It is similar to the EU directive RoHS.
Halogen Free	Halogen Free	SCHURTER AG	SCHURTER strives to offer our customers halogen free products.
REACH	REACH	SCHURTER AG	On 1 June 2007, Regulation (EC) No 1907/2006 on the Registration, Evaluation, Authorization and Restriction of Chemicals 1 (abbreviated as "REACH") entered into force.
V-Lock		SCHURTER AG	V-Lock system are based on a matching plug-dose combination. The connector is equipped with a notch intended for use with the latching cordset. The cord latching system prevents against accidental removal of the cordset.

Dimensions [mm]

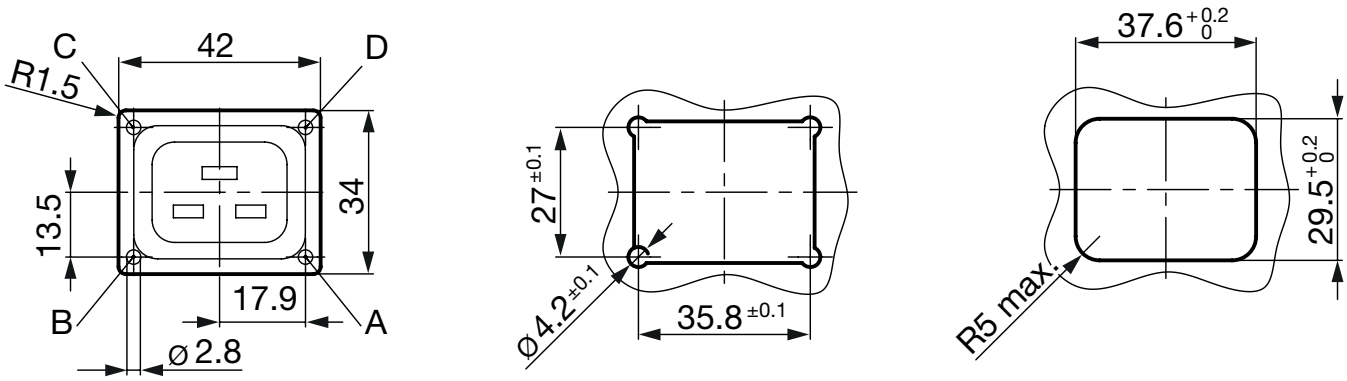

Version "along" (wires along to pin axis)

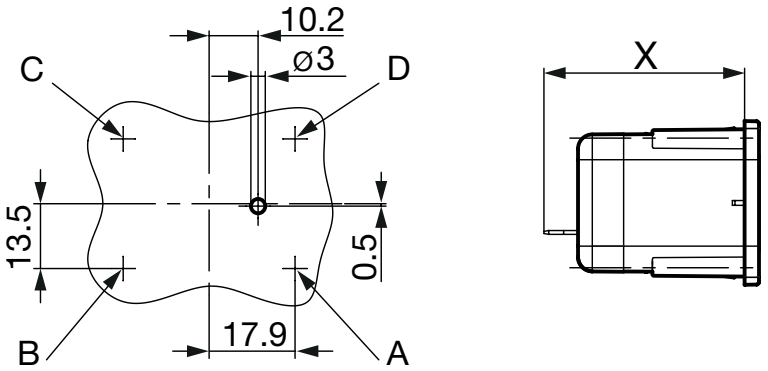

Length X in mm	
Solder terminal	44.1
Qick-connect terminal	43.7
PCB terminal	41.8

Version "cross" (wires cross to pin axis)

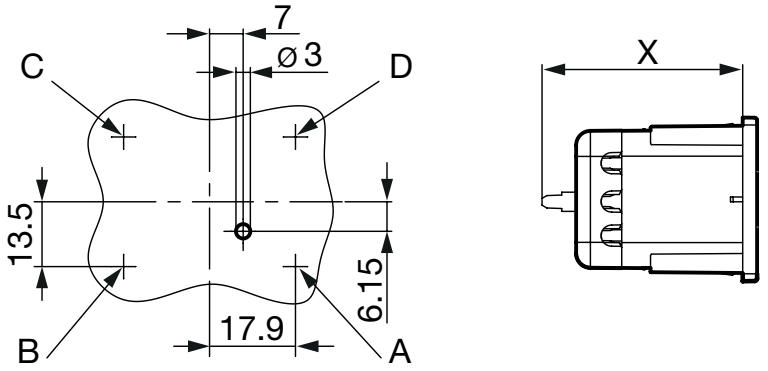

Length X in mm	
Solder terminal	41.7
Qick-connect terminal	43.7
PCB terminal	41.8

Assembly Instructions

Wire press version "cross"

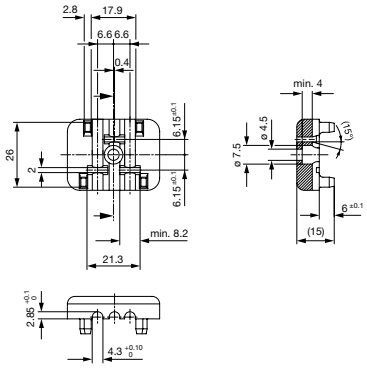

Wire press version "along"

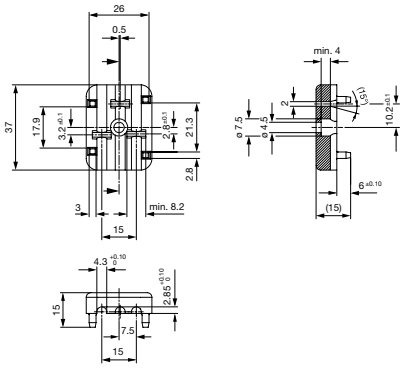

- Please see the mounting instructions for a more dataied description of the assembly. Mounting instruction
- You can find the CAD files for wire press tools in the downloads. CAD-Drawings

All Variants

Alignment 1)	Terminal type live contact	Conductor cross section	Panel Thickness s [mm]	Light Pipe Position - A	Light Pipe Position - B	Light Pipe Position - C	Light Pipe Position - D	Color	Order Number
along	PCB terminals	2.5 mm²	1.5		●	●		black	3-110-012
along	PCB terminals	4.0 mm² / 12 AWG	1.5		●	●		black	3-103-026
along	PCB terminals	2.5 mm²	2.0		●	●		black	3-110-013
along	PCB terminals	4.0 mm² / 12 AWG	2.0		●	●		black	3-110-014
cross	PCB terminals	2.5 mm²	1.5			●	●	black	3-110-015
cross	PCB terminals	4.0 mm² / 12 AWG	1.5			●	●	black	3-110-016
cross	PCB terminals	2.5 mm²	2.0			●	●	black	3-110-020
cross	PCB terminals	4.0 mm² / 12 AWG	2.0			●	●	black	3-110-021

Most Popular.

Availability for all products can be searched real-time:https://www.schurter.com/en/Stock-Check/Stock-Check-SCHURTER

1) The alignment describes whether the wires are along or across to the connector pin axis.

Packaging unit 50 Pcs

Required Accessory

Description

Light Pipe
Transparent Plexiglas Light Pipe

Mating Inlets/Plugs

Category / Description

Plug Overview complete

IEC Plug I, Cord Connector (Rewireable), Straight	4796
IEC Plug I, Cord Connector (Rewireable), Angled	4789

Plug further types to 4710-5

Mating Inlets/Plugs shuttered

Interconnection Cord Overview complete

VAC19KS, Interconnection, V-Lock cord retaining, 2.0 m, Connector IEC C19, H05VV-F3G1.5 / SJT 3x14 AWG, black	3-100-362
VAC19KS, Interconnection, V-Lock cord retaining, 3.0 m, Connector IEC C19, H05VV-F3G1.5 / SJT 3x14 AWG, black	3-100-363
VAC19KS, Interconnection, V-Lock cord retaining, 1.0 m, Connector IEC C19, H05VV-F3G1.5, black	6051.2147
VAC19KS, Interconnection, V-Lock cord retaining, 1.0 m, Connector IEC C19, H05VV-F3G1.5 / SJT 3x14 AWG, black	6051.2197
VAC19KS, Interconnection, V-Lock cord retaining, 2.0 m, Connector IEC C19, H05VV-F3G1.5, black	6051.2047

Interconnection Cord further types to 4710-5

The specifications, descriptions and illustrations indicated in this document are based on current information. All content is subject to modifications and amendments. Information furnished is believed to be accurate and reliable. However, users should independently evaluate the suitability and test each product selected for their own applications.