463-001
EMI/RFI Environmental G-Spring Backshell
with Strain Relief
Rotatable Coupling - Low Profile

CONNECTOR DESIGNATORS

A-F-H-L-S

ROTATABLE COUPLING

463 F S 001 M 16 05 F 6

- Product Series
- Connector Designator
- Angle and Profile
  - A = 90°
  - B = 45°
  - S = Straight
- Basic Part No.
- Finish (Table II)
- Shell Size (Table I)
- Cable Entry (Table IV)
- Strain Relief Style (F, G)
- Length: S only (1/2 inch increments: e.g. 6 = 3 inches)

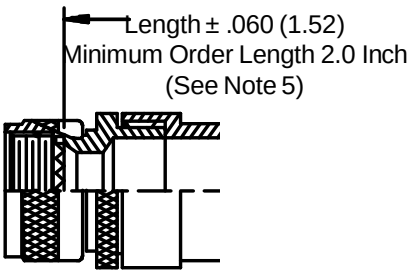

STYLE 2 (STRAIGHT See Note 1)

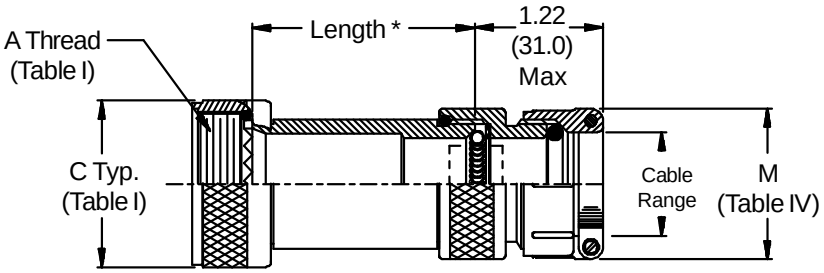

* Length ± .060 (1.52)
Minimum Order Length 1.5 Inch
(See Note 5)

Shown with Style F Strain Relief

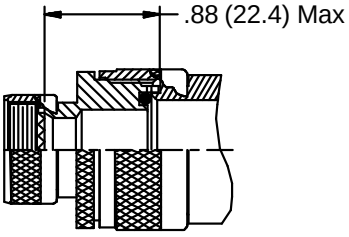

STYLE 2 (45° & 90° See Note 1)

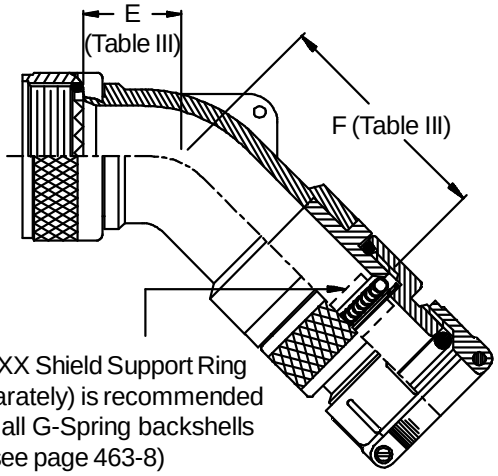

469-001-XX Shield Support Ring (order separately) is recommended for use in all G-Spring backshells (see page 463-8)

Shown with Style F Strain Relief

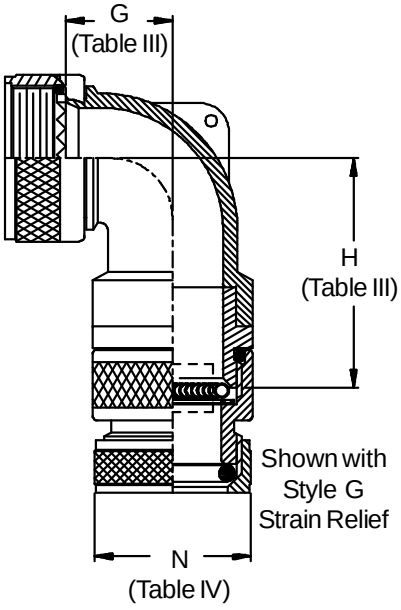

Shown with Style G Strain Relief

© 2005 Glenair, Inc.

See inside back cover fold-out or pages 13 and 14 for Tables I and II.

TABLE III: ELBOW DIMENSIONS

Shell Size Conn. Desig. A-F-L-S	H	E Max		F Max		G Max		H Max	
08	09	.413	(10.5)	1.720	(43.7)	.500	(12.7)	1.670	(42.4)
10	11	.520	(13.2)	1.720	(43.7)	.595	(15.1)	1.790	(45.5)
12	13	.582	(14.8)	1.780	(45.2)	.610	(15.5)	1.810	(46.0)
14	15	.645	(16.4)	1.870	(47.5)	.700	(17.8)	1.880	(47.8)
16	17	.738	(18.7)	1.980	(50.3)	.885	(22.5)	1.970	(50.0)
18	19	.926	(23.5)	2.170	(55.1)	.975	(24.8)	2.140	(54.4)
20	21	.926	(23.5)	2.170	(55.1)	.975	(24.8)	2.140	(54.4)
22	23	1.020	(25.9)	2.320	(58.9)	1.125	(28.6)	2.250	(57.2)
24	25	1.020	(25.9)	2.320	(58.9)	1.125	(28.6)	2.250	(57.2)
28		1.145	(29.1)	2.370	(60.2)	1.225	(31.1)	2.420	(61.5)
32		1.207	(30.7)	2.470	(62.7)	1.575	(40.0)	2.670	(67.8)
36		1.238	(31.4)	2.560	(65.0)	1.775	(45.1)	2.670	(67.8)

TABLE IV: CABLE ENTRY

Dash No.	M Max		N Max		Cable Range Min		Cable Range Max	
01	.843	(21.4)	.625	(15.9)	.125	(3.2)	.250	(6.4)
02	.968	(24.6)	.750	(19.1)	.156	(4.0)	.375	(9.5)
03	1.046	(26.6)	.875	(22.2)	.250	(6.4)	.438	(11.1)
04	1.156	(29.4)	1.000	(25.4)	.280	(7.1)	.500	(12.7)
05	1.218	(30.9)	1.125	(28.6)	.375	(9.5)	.625	(15.9)
06	1.343	(34.1)	1.250	(31.8)	.500	(12.7)	.750	(19.1)
07	1.468	(37.3)	1.375	(34.9)	.625	(15.9)	.875	(22.2)
08	1.593	(40.5)	1.500	(38.1)	.750	(19.1)	1.000	(25.4)
09	1.718	(43.6)	1.625	(41.3)	.875	(22.2)	1.125	(28.6)
10	1.843	(46.8)	1.750	(44.5)	1.000	(25.4)	1.250	(31.8)
11*	2.187	(55.5)	1.875	(47.6)	1.125	(28.6)	1.375	(34.9)
12*	2.312	(58.7)	2.000	(50.8)	1.250	(31.8)	1.500	(38.1)
13*	2.437	(61.9)	2.125	(54.0)	1.375	(34.9)	1.625	(41.3)
14*	2.546	(64.7)	2.250	(57.2)	1.500	(38.1)	1.750	(44.5)

* Consult factory for availability

1. Shield Support Ring (469-001-XX) is recommended for use in all G-Spring backshells (see page 463-8).
2. When maximum cable entry (page 21) is exceeded, Style 2 will be supplied. Dimensions E, F, G and H will not apply. Please consult factory.
3. Metric dimensions (mm) are indicated in parentheses.
4. Cable range is defined as the accommodations range for the wire bundle or cable. Dimensions shown are not intended for inspection criteria.
5. Consult factory for shorter lengths on straight backshells.
6. O-Ring not supplied with Connector Designator A.

© 2005 Glenair, Inc.