Rotary Knob

45KN019-GRX

Date Last Revised: 11-17-08

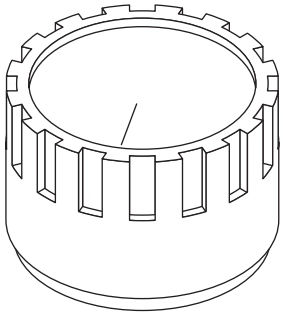

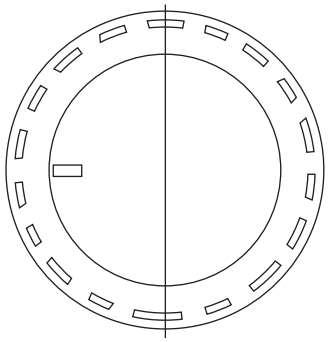

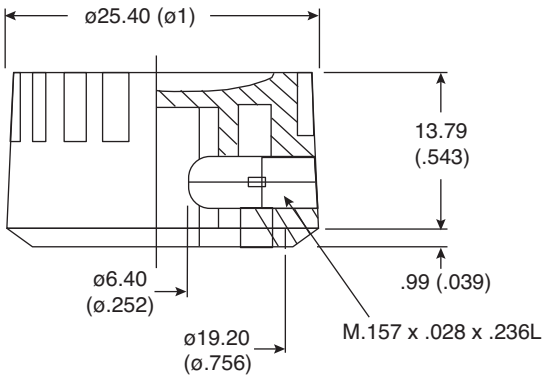

Dimensions: mm (in.)

SPECIFICATIONS	
Color of Body:	Black
Indicator Type:	Painted line
Shaft Hole:	ø.25
Fitting:	Screw type
Insert:	Zinc
Set Screw:	Brass
RoHS Compliant by Exemption	

Available from Mouser Electronics
1-800-346-6873 / www.mouser.com

EPD-200538

Specifications are subject to change without notice. No liability or warranty implied by this information. Environmental compliance based on producer documentation.