Pomona®

Model 4524
BNC (Male To Female) With Molded Strain Reliefs

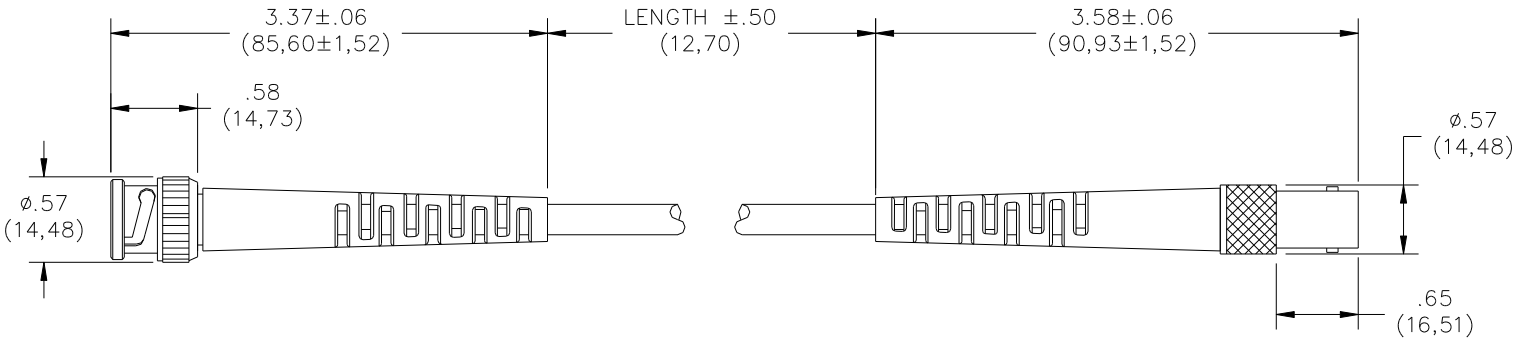

FEATURES:

- Attach to BNC (Male or Female) cables to quickly extend at cable lengths.
- BNC Connectors feature tarnish resistant bodies and PTFE dielectrics for optimum performance.
- BNC (Male) center contact is gold plated and the BNC (Female) is gold plated Beryllium Copper for reliable electrical connection.
- Strain Relief's are molded to the connectors and cable to ensure long cable life.

MATERIALS:

BNC Connectors:
Body: Brass, Nickel Plated
Center Contacts: Brass, Gold Plated (Male) Beryllium Copper, Gold Plated (Female)
Dielectric: PTFE
Impedance: 50 Ohm
Strain Relief: PVC Molded to Cable, Color: Black
Marking: "Pomona 4524-C-XX"
Cable: RG58C/U, Impedance: 50 Ohms Nominal, O.D., .195" (5,0 mm), Color: Black,
Capacitance: 30.8 pF/Ft., Marking: "POMONA", "4524-C-XX"

RATINGS:

Voltage: Shield/Earth: 30VAC/60VDC Max.
Inner Conductor/Shield: 500VRMS Max.
Operating Temperature: 50°C (+122°F) Max.

ORDERING INFORMATION: Model 4524-C-XX XX = Cable length
Std. Lengths: 36" (91,44cm), 48" (121,92cm), 60" (152,4cm).
Additional lengths can be quoted upon requested.
Ordering Ex.: 4524-C-60 is a cable with a length of 60" (152,4 cm)

All dimensions are in inches. Tolerances (except noted): .xx = ±.02" (,51 mm), .xxx = ± .005" (,127 mm).
All specifications are to the latest revisions. Specifications are subject to change without notice.
Registered trademarks are the property of their respective companies. Made in USA