AC axial compact fan



ebm-papst St. Georgen GmbH & Co. KG
Hermann-Papst-Straße 1
D-78112 St. Georgen
Phone +49 7724 81-0
Fax +49 7724 81-1309
info2@de.ebmpapst.com
www.ebmpapst.com

Nominal data

Type	4500 N	
Phase		1~
Nominal voltage	VAC	115
Frequency	Hz	60
Speed	min^{-1}	3000
Power input	W	15.0
Min. ambient temperature	°C	-10
Max. ambient temperature	°C	65
Air flow	m^3/h	169
Sound power level	B	5.7
Sound pressure level	dB(A)	48

ml = max. load · me = max. efficiency · fa = running at free air · cs = customer specs · cu = customer unit
Subject to alterations

AC axial compact fan

Technical features

General description	AC voltage fan with external rotor shaded-pole motor. Protected from overload by impedance protection. Fan housing and fan impeller made of metal. Inlet over bars. Rotational direction clockwise looking at rotor. Types 4890 N and 4840 N air exhaust over bars. Electrical connection to 2 flat plugs 3.0 x 0.5 mm. Impeller with 3 or 5 blades, see note for fan type. Optionally available: variants with reinforced mounting flanges and single strands that are brought out. Fan housing with grounding lugs with M4 and UNC thread. Mass 550 g. Please note our new ACmaxx series. With identical fastening dimensions and voltages, this series achieves higher energy efficiency.
Mass	0.550 kg
Dimensions	119 x 119 x 38 mm
Material of impeller	Metal
Housing material	Metal
Direction of air flow	Inlet over bars
Direction of rotation	Right, looking at rotor
Bearing	Sintec sleeve bearing system
Lifetime L10 at 40 °C	47500 h
Lifetime L10 at maximum temperature	25000 h
Connection line	2 flat plugs 3.0 x 0.5 mm. Housing with grounding lugs for screw M4 and UNC.
Motor protection	Protected from overload using impedance protection
Approval	VDE, CSA, UL, CE

ebm-papst St. Georgen GmbH & Co. KG · Hermann-Papst-Straße 1 · D-78112 St. Georgen · Phone +49 7724 81-0 · Fax +49 7724 81-1309 · info2@de.ebmpapst.com · www.ebmpapst.com

AC axial compact fan

Product drawing

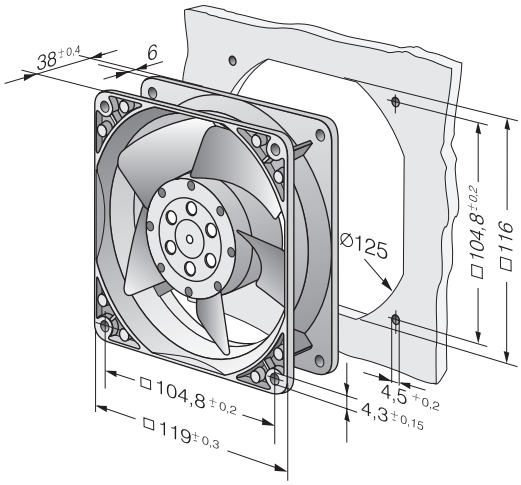

ebm-papst St. Georgen GmbH & Co. KG · Hermann-Papst-Straße 1 · D-78112 St. Georgen · Phone +49 7724 81-0 · Fax +49 7724 81-1309 · info2@de.ebmpapst.com · www.ebmpapst.com

AC axial compact fan

Charts: Air flow

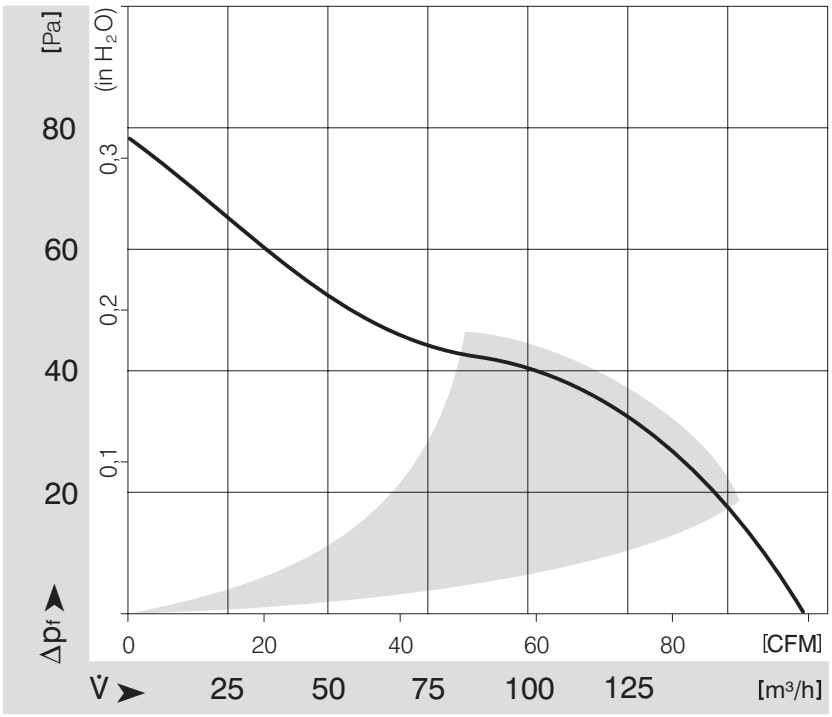

ebm-papst St. Georgen GmbH & Co. KG · Hermann-Papst-Straße 1 · D-78112 St. Georgen · Phone +49 7724 81-0 · Fax +49 7724 81-1309 · info2@de.ebmpapst.com · www.ebmpapst.com