Color Coded Plastic Knobs

450-AA Series

Date Last Revised: 6/19/13

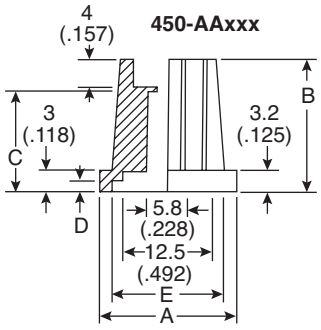

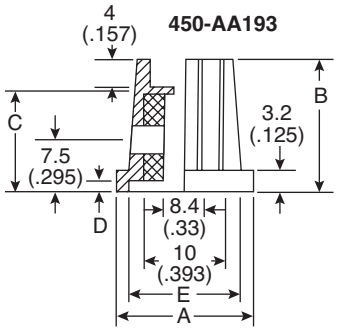

DIMENSIONS: mm (in.)

Part Number	A	B	C	D	E	Shaft	Colour
450-AA150	15 (.59)	19 (.748)	12 (.47)	2 (.079)	13 (.572)	6	Black
450-AA150C	15 (.59)	19 (.748)	12 (.47)	2 (.079)	13 (.572)	6	Clear
450-AA151	15 (.59)	19 (.748)	12 (.47)	2 (.079)	13 (.572)	6	Grey
450-AA152	15 (.59)	19 (.748)	12 (.47)	2 (.079)	13 (.572)	T18	Grey
450-AA152C	15 (.59)	19 (.748)	12 (.47)	2 (.079)	13 (.572)	T18	Clear
450-AA180	17.6 (.693)	16 (.629)	15 (.59)	3.6 (.142)	14.6 (.575)	6.4	Black
450-AA181	17.6 (.693)	16 (.629)	15 (.59)	3.6 (.142)	14.6 (.575)	T18	Black
450-AA190	19.4 (.767)	19 (.748)	14 (.55)	1.6 (.063)	15.6 (.614)	6.4	Black
450-AA191	19.4 (.767)	19 (.748)	14 (.55)	1.6 (.063)	15.6 (.614)	T18	Grey
450-AA192	19.4 (.767)	19 (.748)	14 (.55)	1.6 (.063)	15.6 (.614)	T18	Black
450-AA193	19.4 (.767)	19 (.748)	14 (.55)	1.6 (.063)	15.6 (.614)	6.4	Black

SPECIFICATIONS	
Material:	Plastic
Shaft	ø.236(ø6mm), ø.252(ø6.4mm)
Fits:	6mm D-Shaft, T18, 6.4mm D-Shaft

Available from Mouser Electronics
1-800-346-6873 / www.mouser.com

Specifications are subject to change without notice. No liability or warranty implied by this information. Environmental compliance based on producer documentation.

Mouser Electronics

Authorized Distributor

Click to View Pricing, Inventory, Delivery & Lifecycle Information:

Eagle Plastic Devices:

450-AA192 450-AA152 450-AA150 450-AA151 450-AA191 450-AA190 450-AA193 450-AA180 450-AA181 450-AA152C 450-AA150C