Knobs

450-6003, 450-6005, 450-6006,
450-6007, 450-6008, 450-7005

Date Last Revised: 6-24-05

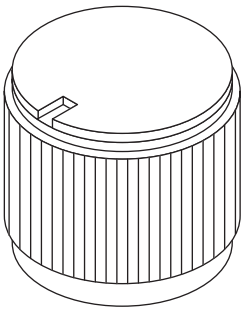

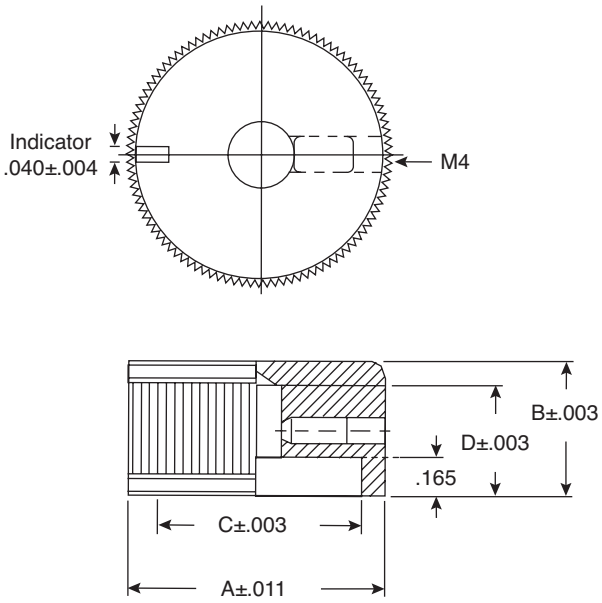

Dimensions: In.

SPECIFICATIONS	
Type:	knurled aluminum
Aluminum:	997
Finish:	A-Clear anodize, B-Black anodize

Mouser Stock No.	Color	A	B	C	D	Finish	Shaft Size
450-6003	Aluminum	.500	.622	.374	.512	A	.25±.05
450-6005	Aluminum	.748	.622	.591	.512	A	.25±.05
450-6006	Aluminum	.937	.622	.709	.512	A	.25±.05
450-6007	Aluminum	1.252	.622	.984	.512	A	.25±.05
450-6008	Black	1.252	.622	.984	.512	B	.25±.05
450-7005	Black	.748	.622	.591	.512	B	.25±.05

Available from Mouser Electronics
1-800-346-6873
www.mouser.com

EPD-200232

Specifications are subject to change without notice. No liability or warranty implied by this information. Environmental compliance based on producer documentation.

Mouser Electronics

Authorized Distributor

Click to View Pricing, Inventory, Delivery & Lifecycle Information:

Eagle Plastic Devices:

450-6005 450-6003 450-6006 450-6007 450-6008 450-7005