molex
one company > a world of innovation

This document was generated on 06/08/2010

PLEASE CHECK WWW.MOLEX.COM FOR LATEST PART INFORMATION

Part Number: 0443800002
Status: Active
Overview: modular_plugs_jacks
Description: Modular Jack, Right Angle, Low Profile, Inverted, 6/6, Unshielded

Documents:

3D Model
Drawing (PDF)
Application Specification (PDF)
Product Specification PS-43860-003 (PDF)
RoHS Certificate of Compliance (PDF)

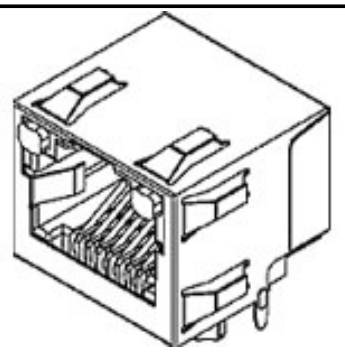

Series image - Reference only

Agency Certification

CSA	LR19980
UL	E107635

General

Product Family	Modular Jacks/Plugs
Series	44380
Component Type	PCB Jack
Magnetic	No
Overview	modular_plugs_jacks
Performance Category	3
Power over Ethernet (PoE)	N/A
Product Name	RJ11

Physical

Boot Color	N/A
Color - Resin	Black
Durability (mating cycles max)	500
Inverted / Top Latch	Yes
Keying to Mating Part	None
Lightpipes/LEDs	None
Material - Metal	Phosphor Bronze
Material - Plating Mating	Gold
Material - Plating Termination	Tin
Material - Resin	High Temperature Thermoplastic
Orientation	Right Angle (Side Entry)
PCB Locator	Yes
PCB Retention	Yes
PCB Thickness Recommended (in)	0.039 In
PCB Thickness Recommended (mm)	1.00 mm
Packaging Type	Tube
Panel Mount	Without Flange
Pitch - Mating Interface (in)	0.040 In
Pitch - Mating Interface (mm)	1.02 mm
Pitch - Term. Interface (in)	0.040 In
Pitch - Term. Interface (mm)	1.02 mm
Plating min: Mating (µin)	50
Plating min: Mating (µm)	1.25
Plating min: Termination (µin)	100
Plating min: Termination (µm)	2.5
Ports	1
Positions / Loaded Contacts	6/6
Surface Mount Compatible (SMC)	Yes
Temperature Range - Operating	-40°C to +85°C
Termination Interface: Style	Through Hole
Waterproof / Dustproof	No

EU RoHS
ELV and RoHS Compliant
REACH SVHC
Not Reviewed
Halogen-Free Status
Not Reviewed

China RoHS

Need more information on product environmental compliance?

Email productcompliance@molex.com
For a multiple part number RoHS Certificate of Compliance, click here

Please visit the Contact Us section for any non-product compliance questions.

Search Parts in this Series
44380Series

Mates With
FCC 68 Plugs

Wire/Cable Type	N/A

Electrical

Current - Maximum per Contact	1.5A
Grounding to PCB	No
Grounding to Panel	None
Shielded	No
Voltage - Maximum	150V AC (RMS)

Solder Process Data

Lead-free Process Capability	Wave Capable (TH only)

Material Info

Reference - Drawing Numbers

Packaging Specification	PK-43860-004
Product Specification	PS-43860-003, RPS-43860-004, RPS-43860-007, RPS-43860-008, RPS-43860-013
Sales Drawing	SD-44380-001

This document was generated on 06/08/2010

PLEASE CHECK WWW.MOLEX.COM FOR LATEST PART INFORMATION

NOTES
1) MATERIAL:
HOUSING: GLASS FILLED NYLON, 94V-0 COLOR: BLACK
TERMINALS: PHOSPHOR BRONZE, .015/(0.38) THICK
SHIELD: BRASS
2) PLATING:
TERMINALS:
SELECT GOLD IN CONTACT AREA: 50 MICROINCHES (1.27 MICROMETERS) MIN.,
*SELECT TIN IN PC TAIL AREA: 100 MICROINCHES (2.54 MICROMETERS) MIN.,
WITH OVERALL NICKEL UNDERPLATE: 50 MICROINCHES (1.27 MICROMETERS) MIN.
*THE PRIMARY SHIPPING CARTON WILL BE LABELED "COMPLIANT TO RoHS DIRECTIVE 2002/95/EC AND ELV ANNEX II OF DIRECTIVE 2000/53/EC". CARTONS WITHOUT THIS LABEL MAY CONTAIN PRODUCT WITH TIN-LEAD IN THE PC TAIL AREA.
3) PRODUCT SPECIFICATION:
CONNECTOR PERFORMANCE SPECIFICATIONS PER MOLEX PRODUCT SPECIFICATION PS-43860-003
4) PACKAGING OPTIONS:
CONNECTOR ASSEMBLIES IN EXTRUDED TUBES PER PACKAGING SPECIFICATION PK-43860-004
5) ALL UNTOLERANCED DIMENSIONS ARE SHOWN FOR REFERENCE ONLY
6) CONFORMS TO F.C.C. REGULATION PART 68.5 FOR MODULAR JACKS.
7) THIS PART CONFORMS TO CLASS B REQUIREMENTS OF COSMETIC SPECIFICATION PS-45499-002.

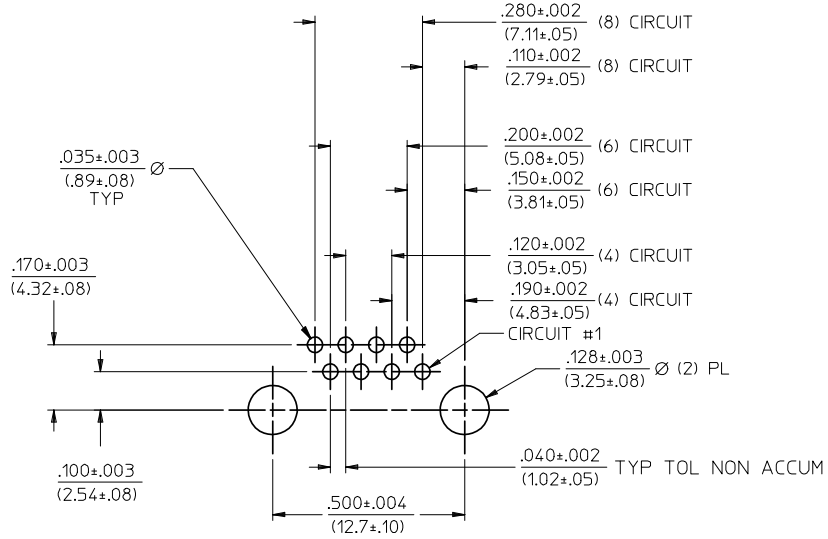

PC BOARD LAYOUT
COMPONENT SIDE OF BOARD
RECOMMENDED PC BOARD THICKNESS .039/1.00

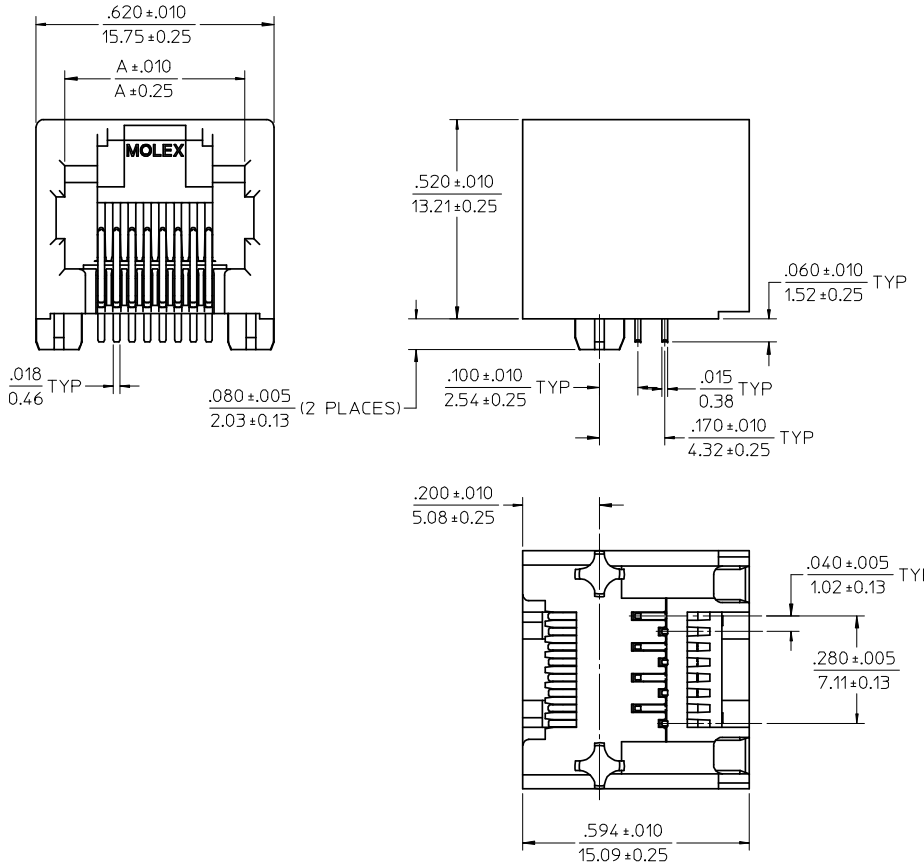

MATERIAL NUMBER	CONNECTOR SIZE	DIM. "A"	CIRCUITS
44380-0001	8	.470/11.94	8
44380-0002	6	.389/9.88	6
44380-0003	6	.389/9.88	4
44380-0019	8	.470/11.94	4

RECREATED IN 3D
EC NO: UCP2008-0965 2007/11/08
DRWN: JBELL 2007/12/04
CH'KD: LSCHMIDT 2007/12/05
APPR: FSMITH
DESCRIPTION
REV

QUALITY SYMBOLS
▼=0
▽=0

GENERAL TOLERANCES (UNLESS SPECIFIED)

	mm	INCH
4 PLACES	± ---	± ---
3 PLACES	± ---	± ---
2 PLACES	± ---	± ---
1 PLACE	± ---	± ---
ANGULAR ±1/2°		

DRAFT WHERE APPLICABLE MUST REMAIN WITHIN DIMENSIONS

DIMENSION STYLE: IN/MM
SCALE: 4:1
DESIGN UNITS: INCH
THIRD ANGLE PROJECTION

DRAWN BY	MAYO	DATE 1999/04/09
CHECKED BY	ROBERTS	DATE 1999/04/09
APPROVED BY	ROBERTS	DATE 1999/04/09

TITLE: INVERTED MODULAR JACK ASSEMBLY (MINI-PCI COMPLIANT)
MOLEX INCORPORATED
MATERIAL NO.: SEE CHART
DOCUMENT NO.: SD-44380-001
SHEET NO.: 1 OF 5
SIZE C

THIS DRAWING CONTAINS INFORMATION THAT IS PROPRIETARY TO MOLEX INCORPORATED AND SHOULD NOT BE USED WITHOUT WRITTEN PERMISSION

NOTES
1) MATERIAL:
HOUSING: GLASS FILLED NYLON, 94V-0 COLOR: BLACK
TERMINALS: PHOSPHOR BRONZE, .015/(0.38) THICK
SHIELD: BRASS
2) PLATING:
TERMINALS:
SELECT GOLD IN CONTACT AREA: 50 MICROINCHES (1.27 MICROMETERS) MIN.,
*SELECT TIN IN PC TAIL AREA: 100 MICROINCHES (2.54 MICROMETERS) MIN.,
WITH OVERALL NICKEL UNDERPLATE: 50 MICROINCHES (1.27 MICROMETERS) MIN.
SHIELD:
*100 MICROINCHES (2.54 MICROMETERS) NICKEL OVER 50 MICROINCHES
(1.27 MICROMETERS) COPPER UNDERPLATE, PCB GROUND TABS DIPPED IN TIN
*THE PRIMARY SHIPPING CARTON WILL BE LABELED "COMPLIANT
TO RoHS DIRECTIVE 2002/95/EC AND ELV ANNEX II OF DIRECTIVE
2000/53/EC". CARTONS WITHOUT THIS LABEL MAY CONTAIN
PRODUCT WITH TIN-LEAD IN THE PC TAIL AREA.
3) PRODUCT SPECIFICATION:
CONNECTOR PERFORMANCE SPECIFICATIONS PER MOLEX
PRODUCT SPECIFICATION PS-43860-003
4) PACKAGING OPTIONS:
CONNECTOR ASSEMBLIES IN THERMOFORMED TRAYS
PER PACKAGING SPECIFICATION PK-44380-005
OPTION (44380-2004) PACKAGED IN TAPE AND REEL
5) ALL UNTOLERANCED DIMENSIONS ARE SHOWN FOR
REFERENCE ONLY
6) CONFORMS TO F.C.C. REGULATION PART 68.5 FOR MODULAR JACKS
7) AVAILABLE WITH THE (2) SPECIFIED PANEL GROUND TABS
OMITTED FOR SIDE TO SIDE STACKABILITY, PER THE
ASSEMBLY MATERIAL NUMBER TABLE.
8) THIS PART CONFORMS TO CLASS B REQUIREMENTS OF COSMETIC
SPECIFICATION PS-45499-002.

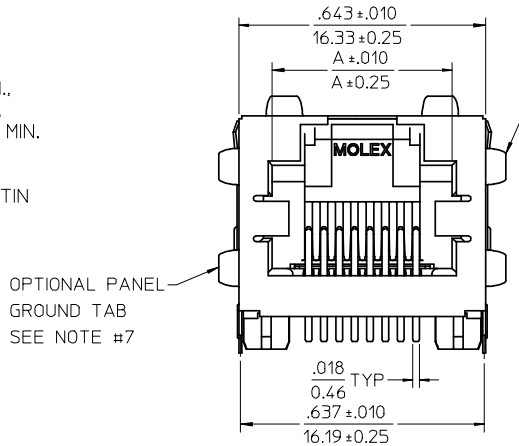

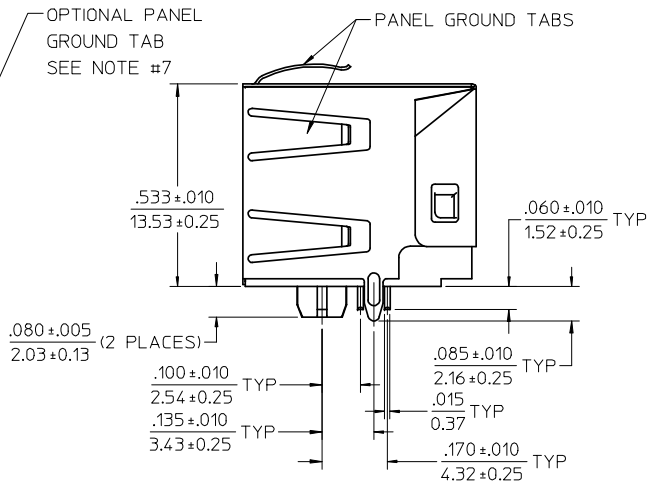

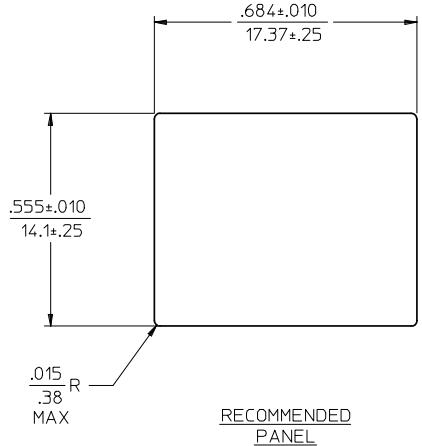

RECOMMENDED
PANEL
OPENING

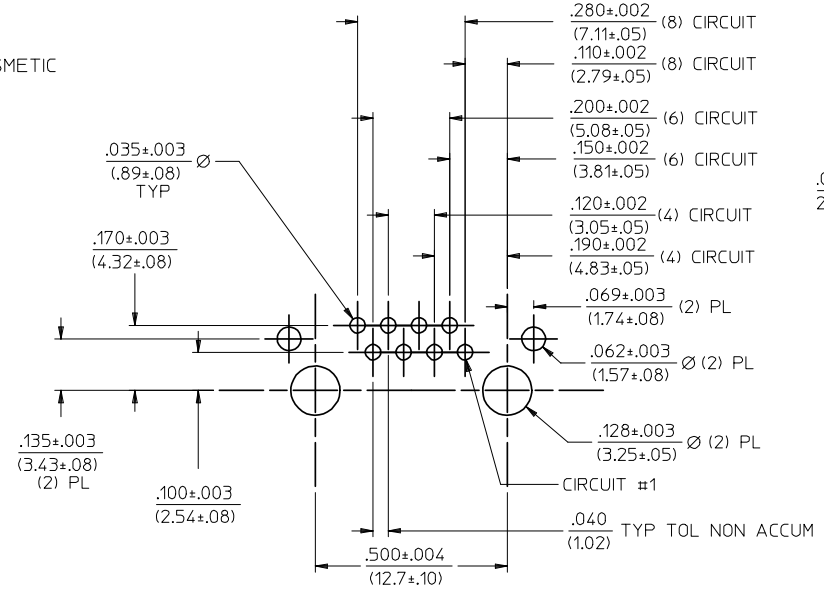

PC BOARD LAYOUT
COMPONENT SIDE OF BOARD
RECOMMENDED PC BOARD THICKNESS: .039/1.00

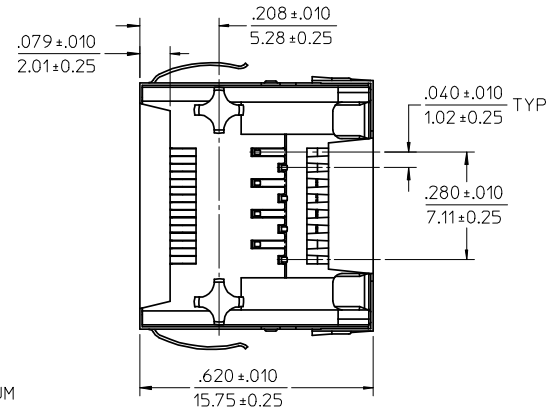

MATERIAL NUMBER	CONNECTOR SIZE	DIM. "A"	CIRCUITS	PANEL GROUND TABS
44380-0004	8	.470/11.94	8	ALL
44380-0005	6	.389/9.88	6	ALL
44380-0006	6	.389/9.88	4	ALL
44380-0013	8	.470/11.94	8	SEE NOTE #7
44380-0014	6	.389/9.88	6	SEE NOTE #7
44380-0015	6	.389/9.88	4	SEE NOTE #7
44380-2004	8	.470/11.94	8	ALL

SEE SHEET 1
EC NO: UCP2008-0965 2007/11/08
DRWN: JBELL 2007/12/04
CH'KD: LSCHMIDT 2007/12/05
APPR: FSMITH
DESCRIPTION
REV

QUALITY SYMBOLS
▼=0
▽(C)=0

GENERAL TOLERANCES (UNLESS SPECIFIED)

	mm	INCH
4 PLACES	± ---	± ---
3 PLACES	± ---	± ---
2 PLACES	± ---	± ---
1 PLACE	± ---	± ---

ANGULAR ±1/2°

DRAFT WHERE APPLICABLE MUST REMAIN WITHIN DIMENSIONS

DIMENSION STYLE: IN/MM
SCALE: 4:1
DESIGN UNITS: INCH
THIRD ANGLE PROJECTION

DRAWN BY: MAYO DATE: 1999/04/09
CHECKED BY: ROBERTS DATE: 1999/04/09
APPROVED BY: ROBERTS DATE: 1999/04/09
MATERIAL NO.: SEE CHART

TITLE
INVERTED MODULAR
JACK ASSEMBLY
(MINI-PCI COMPLIANT)

MOLEX INCORPORATED

DOCUMENT NO.: SD-44380-001
SHEET NO.: 2 OF 5

SIZE C

THIS DRAWING CONTAINS INFORMATION THAT IS PROPRIETARY TO MOLEX INCORPORATED AND SHOULD NOT BE USED WITHOUT WRITTEN PERMISSION

NOTES
1) MATERIAL:
HOUSING:
GLASS FILLED NYLON, 94V-0, COLOR: BLACK
TERMINALS:
PHOSPHOR BRONZE, .015/(0.38) THK
LIGHTPIPE:
POLYCARBONATE- WAVE OR HAND SOLDER ONLY
(NOT DESIGNED FOR I/R REFLOW OR CONVECTION REFLOW
SOLDER PROCESSES)
POLYSULFONE - MAXIMUM REFLOW TEMPERATURE: 400°F (205°C)
2) PLATING:
TERMINAL:
SELECT GOLD IN CONTACT AREA: 50 MICROINCHES (1.27 MICROMETERS) MIN.,
*SELECT TIN IN PC TAIL AREA: 100 MICROINCHES (2.54 MICROMETERS) MIN.,
WITH OVERALL NICKEL UNDERPLATE: 50 MICROINCHES (1.27 MICROMETERS) MIN.
*THE PRIMARY SHIPPING CARTON WILL BE LABELED "COMPLIANT
TO RoHS DIRECTIVE 2002/95/EC AND ELV ANNEX II OF DIRECTIVE
2000/53/EC". CARTONS WITHOUT THIS LABEL MAY CONTAIN
PRODUCT WITH TIN-LEAD IN THE PC TAIL AND/OR SHIELD.
3) PRODUCT SPECIFICATION:
CONNECTOR PERFORMANCE SPECIFICATIONS PER MOLEX
PRODUCT SPECIFICATION PS-43860-003
4) PACKAGING:
PER PACKAGING SPECIFICATION PK-43860-004
5) APPLICATION SPECIFICATION: AS-43860-001.
6) ALL UNTOLERANCED DIMENSIONS ARE SHOWN FOR REFERENCE ONLY.
7) CONFORMS TO F.C.C. REGULATION PART 68.5 FOR MODULAR JACKS.
8) REFER TO PAGE (5) OF (5) FOR RECOMMENDED PCB LAYOUT.
9) THIS PART CONFORMS TO CLASS B REQUIREMENTS OF COSMETIC
SPECIFICATION PS-45499-002.

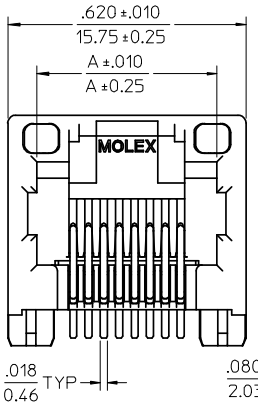

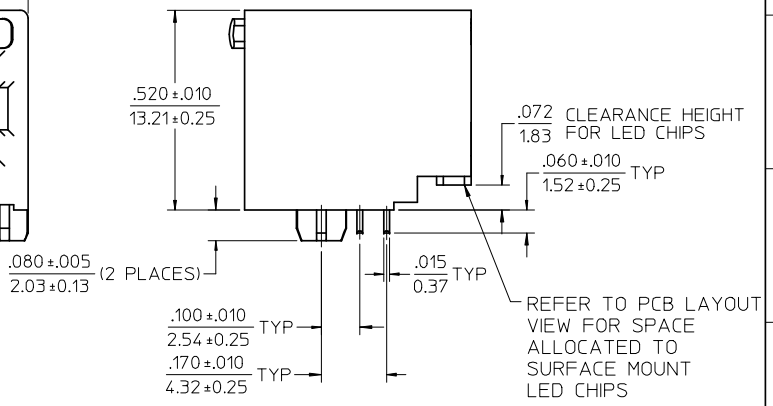

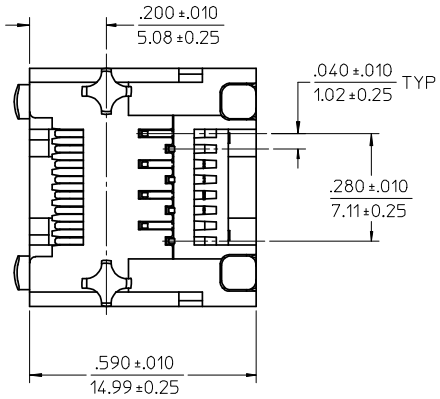

MATERIAL NUMBER	LIGHTPIPE MATERIAL	CONNECTOR SIZE	DIM. "A"	CIRCUITS
44380-0007	POLYCARBONATE	8	.470/11.94	8
44380-0008	POLYCARBONATE	6	.389/9.88	6
44380-0009	POLYCARBONATE	6	.389/9.88	4
44380-0020	POLYSULFONE	8	.470/11.94	8
44380-0021	POLYSULFONE	6	.389/9.88	6
44380-0022	POLYSULFONE	6	.389/9.88	4

SEE SHEET 1
EC NO: UCP2008-0965 2007/11/08
DRWN: JBELL 2007/12/04
CH'KD: LSCHMIDT 2007/12/05
APPR: FSMITH
DESCRIPTION
REV

QUALITY SYMBOLS
▼=0
▽=0

GENERAL TOLERANCES (UNLESS SPECIFIED)

	mm	INCH
4 PLACES	± ---	± ---
3 PLACES	± ---	± ---
2 PLACES	± ---	± ---
1 PLACE	± ---	± ---
ANGULAR ±1/2°		

DRAFT WHERE APPLICABLE MUST REMAIN WITHIN DIMENSIONS

DIMENSION STYLE: IN/MM
SCALE: 4:1
DESIGN UNITS: INCH
THIRD ANGLE PROJECTION

DRAWN BY	MAYO	DATE 1999/04/09
CHECKED BY	ROBERTS	DATE 1999/04/09
APPROVED BY	ROBERTS	DATE 1999/04/09

TITLE: INVERTED MODULAR JACK ASSEMBLY (MINI-PCI COMPLIANT)

molex MOLEX INCORPORATED

MATERIAL NO.: SEE CHART
DOCUMENT NO.: SD-44380-001
SHEET NO.: 3 OF 5

SIZE C

THIS DRAWING CONTAINS INFORMATION THAT IS PROPRIETARY TO MOLEX INCORPORATED AND SHOULD NOT BE USED WITHOUT WRITTEN PERMISSION

NOTES

1) MATERIAL:
   HOUSING:
   GLASS FILLED NYLON, 94V-0, COLOR: BLACK
   TERMINALS:
   PHOSPHOR BRONZE, .015/(0.38) THK
   SHIELD:
   BRASS
   LIGHTPIPE:
   POLYCARBONATE - WAVE OR HAND SOLDER ONLY
   (NOT DESIGNED FOR I/R REFLOW OR CONVECTION REFLOW
   SOLDER PROCESSES)
   POLYSULFONE - MAXIMUM REFLOW TERMPERATURE: 400°F (205°C)
2) PLATING:
   TERMINAL:
   SELECT GOLD IN CONTACT AREA: 50 MICROINCHES (1.27 MICROMETERS) MIN.,
   *SELECT TIN IN PC TAIL AREA: 100 MICROINCHES (2.54 MICROMETERS) MIN.,
   WITH OVERALL NICKEL UNDERPLATE: 50 MICROINCHES (1.27 MICROMETERS) MIN.
   SHIELD:
   *100 MICROINCHES (2.54 MICROMETERS) NICKEL OVER 50 MICROINCHES
   (1.27 MICROMETERS) COPPER UNDERPLATE, PCB GROUND TABS DIPPED IN TIN.
   *THE PRIMARY SHIPPING CARTON WILL BE LABELED "COMPLIANT
   TO RoHS DIRECTIVE 2002/95/EC AND ELV ANNEX II OF DIRECTIVE
   2002/53/EC". CARTONS WITHOUT THIS LABEL MAY CONTAIN
   PRODUCT WITH TIN-LEAD IN THE PC TAIL AND/OR SHIELD.
3) PRODUCT SPECIFICATION:
   CONNECTOR PERFORMANCE SPECIFICATIONS PER MOLEX
   PRODUCT SPECIFICATION PS-43860-003.
4) PACKAGING:
   CONNECTOR ASSEMBLIES IN THERMOFORMED TRAYS
   PER PACKAGING SPECIFICATION PK-44380-005 .
5) APPLICATION SPECIFICATION: AS-43860-001.
6) ALL UNTOLERANCED DIMENSIONS ARE SHOWN FOR
   REFERENCE ONLY.
7) CONFORMS TO F.C.C. REGULATION PART 68.5
   FOR MODULAR JACKS.
8) AVAILABLE WITH THE (2) SPECIFIED PANEL GROUND TABS
   OMITTED FOR SIDE TO SIDE STACKABILITY, PER THE
   ASSEMBLY MATERIAL NUMBER TABLE.
9) REFER TO SHEET (5) OF (5) FOR RECOMMENDED PCB LAYOUT.
10) THIS PART CONFORMS TO CLASS B REQUIREMENTS OF COSMETIC
    SPECIFICATION PS-45499-002.

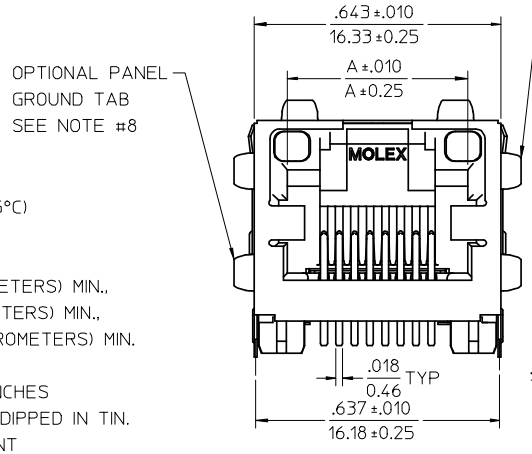

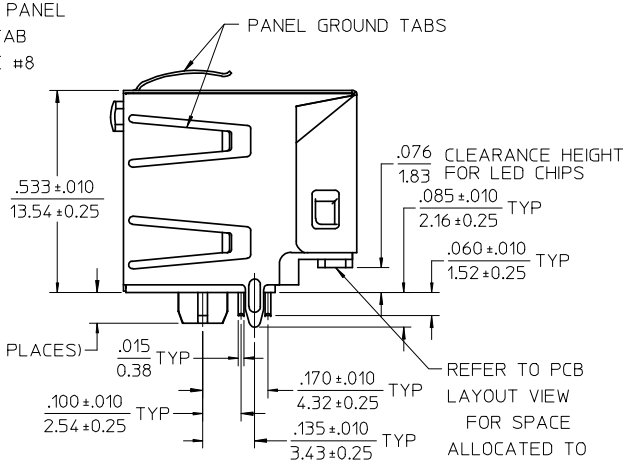

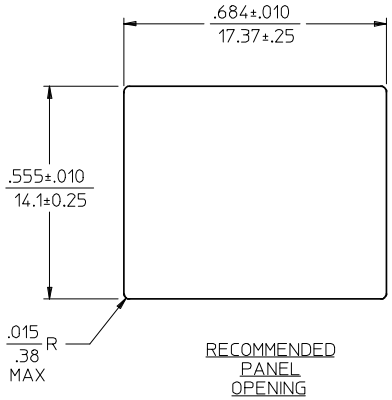

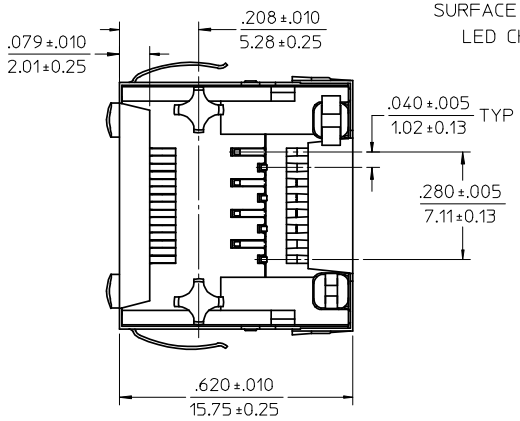

MATERIAL NUMBER	LIGHTPIPE MATERIAL	CONN SIZE	DIM. "A"	CIRCUITS	PANEL GROUND TABS
44380-0010	POLYCARBONATE	8	.470/11.94	8	ALL
44380-0011	POLYCARBONATE	6	.389/9.88	6	ALL
44380-0012	POLYCARBONATE	6	.389/9.88	4	ALL
44380-0016	POLYCARBONATE	8	.470/11.94	8	SEE NOTE #8
44380-0017	POLYCARBONATE	6	.389/9.88	6	SEE NOTE #8
44380-0018	POLYCARBONATE	6	.389/9.88	4	SEE NOTE #8
44380-1010	POLYSULFONE	8	.470/11.94	8	ALL
44380-1011	POLYSULFONE	6	.389/9.88	6	ALL
44380-1012	POLYSULFONE	6	.389/9.88	4	ALL
44380-1016	POLYSULFONE	8	.470/11.94	8	SEE NOTE #8
44380-1017	POLYSULFONE	6	.389/9.88	6	SEE NOTE #8
44380-1018	POLYSULFONE	6	.389/9.88	4	SEE NOTE #8

SEE SHEET 1

REV	DESCRIPTION	EC NO:	DRWN:	CH'KD:	APPR:
C	ADDED PART NUMBERS	UCP2008-0965	JBELL 2007/11/08	LSCHMIDT 2007/12/04	FSMITH 2007/12/05

QUALITY SYMBOLS
▼=0
▽=0

GENERAL TOLERANCES (UNLESS SPECIFIED)

	mm	INCH
4 PLACES	± ---	± ---
3 PLACES	± ---	± ---
2 PLACES	± ---	± ---
1 PLACE	± ---	± ---

ANGULAR ±1/2°

DRAFT WHERE APPLICABLE MUST REMAIN WITHIN DIMENSIONS

DIMENSION STYLE: IN/MM
SCALE: 4:1
DESIGN UNITS: INCH
THIRD ANGLE PROJECTION

DRAWN BY	MAYO	DATE 1999/04/09
CHECKED BY	ROBERTS	DATE 1999/04/09
APPROVED BY	ROBERTS	DATE 1999/04/09

TITLE: INVERTED MODULAR JACK ASSEMBLY (MINI-PCI COMPLIANT)

molex MOLEX INCORPORATED

MATERIAL NO.: SEE CHART
DOCUMENT NO.: SD-44380-001
SHEET NO.: 4 OF 5
SIZE: C

THIS DRAWING CONTAINS INFORMATION THAT IS PROPRIETARY TO MOLEX INCORPORATED AND SHOULD NOT BE USED WITHOUT WRITTEN PERMISSION

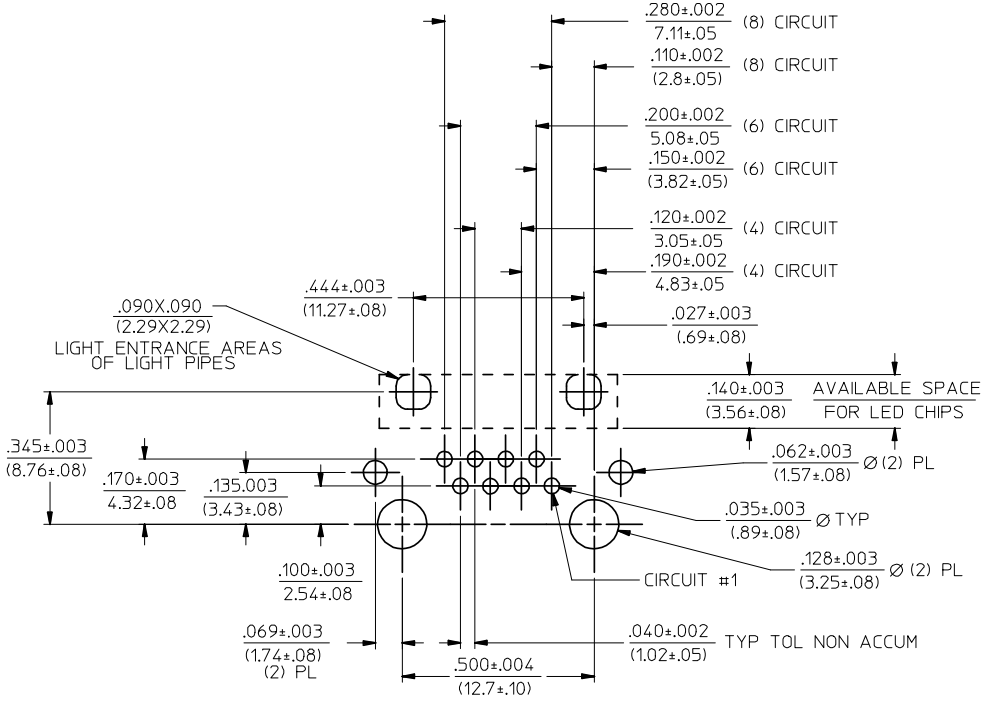

MOLEX RECOMMENDED
PC BOARD LAYOUT
COMPONENT SIDE OF BOARD
RECOMMENDED PC BOARD THICKNESS: .039/1.00

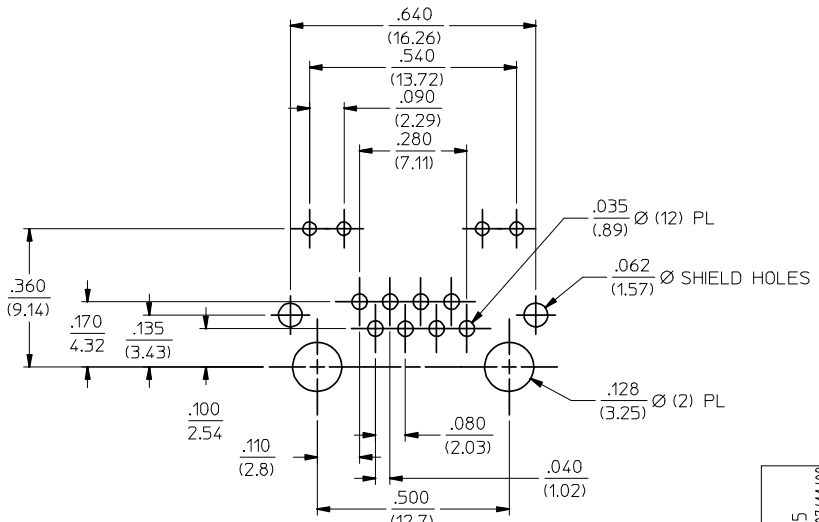

TYPICAL COMPETITION
PCB LAYOUT WITH
INTEGRAL LED'S
(SHOWN FOR REFERENCE ONLY)
RECOMMENDED PC BOARD THICKNESS: .039/1.00

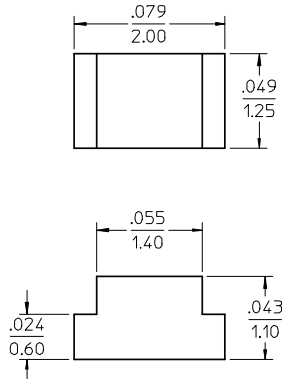

RECOMMENDED SMT
LED DIMENSIONS
SCALE 20:1
(SEE NOTE 1)

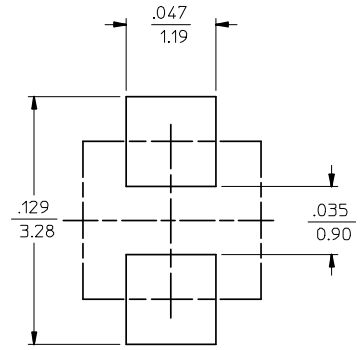

RECOMMENDED SMT
LED SOLDER PATTERN
SCALE 20:1
(SEE NOTE 1)

NOTES:

1. FOR CROSS REFERENCE OF RECOMMENDED LEDS SEE MOLEX WEB SITE.

SEE SHEET 1
EC NO: UCP2008-0965 2007/11/08
DRWN: JBELL 2007/12/04
CH'KD: LSCHMIDT 2007/12/05
APPR: FSMITH
DESCRIPTION
REV

QUALITY SYMBOLS
▼=0
Ⓒ=0

GENERAL TOLERANCES (UNLESS SPECIFIED)

	mm	INCH
4 PLACES	± ---	± ---
3 PLACES	± ---	± ---
2 PLACES	± ---	± ---
1 PLACE	± ---	± ---
ANGULAR ±1/2°		

DRAFT WHERE APPLICABLE
MUST REMAIN
WITHIN DIMENSIONS

DIMENSION STYLE: IN/MM
SCALE: 4:1
DESIGN UNITS: INCH
THIRD ANGLE PROJECTION

DRAWN BY	MAYO	DATE 1999/04/09
CHECKED BY	ROBERTS	DATE 1999/04/09
APPROVED BY	ROBERTS	DATE 1999/04/09

TITLE
INVERTED MODULAR
JACK ASSEMBLY
(MINI-PCI COMPLIANT)

MOLEX INCORPORATED

MATERIAL NO. SEE CHART
DOCUMENT NO. SD-44380-001
SHEET NO. 5 OF 5
SIZE C

THIS DRAWING CONTAINS INFORMATION THAT IS PROPRIETARY TO MOLEX INCORPORATED AND SHOULD NOT BE USED WITHOUT WRITTEN PERMISSION