FEATURES AND SPECIFICATIONS

Mini-Fit™ Test Plugs

Molex introduces a complete line of Mini-Fit test plugs that can perform beyond the standard cycling capabilities demanded in testing environments. Test applications that require repeated cycling with our standard male contact can cause damage to the female contacts. The Mini-Fit test plug features spring-loaded male contacts, which safely maintain pressure against and prevent any damage to the mating female contacts. The Mini-Fit test plug is the perfect solution for providing terminal integrity during continuity testing procedures

Features and Benefits

- Rated for 1000's of mating cycles
- Gold-plated, beryllium copper contacts are precision made for long life
- Recommended for continuity testing only
- Polarized plug prevents mismating to receptacles
- Easy access to solder cups for quick installation
- Minimizes expense and downtime for test plug replacement
- Mini-Fit Test Plug available in dual row circuit sizes 4 to 24, 36 and 40. Can be used with Mini-Fit, Jr. and Mini-Fit BMI receptacles
- Accepts 22 to 26 AWG

Reference information

Mates with: 5557 Mini-Fit, Jr. receptacle and 42474 Mini-Fit, BMI receptacle
Voltage: 600V
Wire Range: 22 to 26 AWG
Durability: 10,000 cycles
Contact Material: Beryllium Copper
Plating: Gold
Packaging: Individual (1 per package)

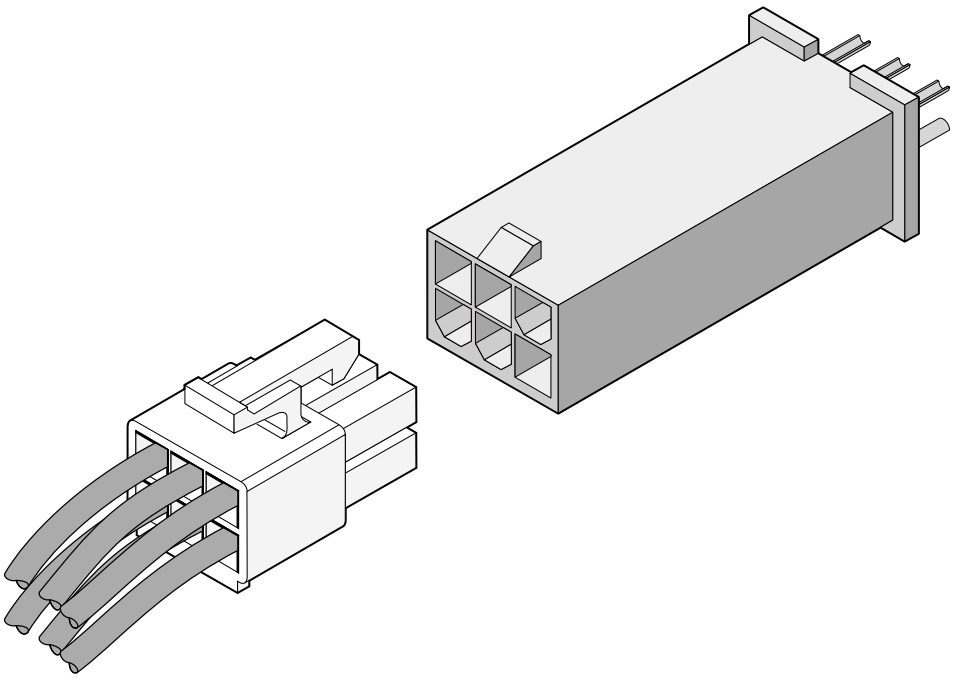

FEATURES AND SPECIFICATIONS

Mini-Fit™ Test Plugs

Features and Benefits

Mini-Fit Test Plug shown with spring-loaded male contacts mated to Mini-Fit, Jr. receptacle.

The male contacts maintain pressure against the mating female contacts, eliminating any damage to the female contact, even after 1000's of cycles.

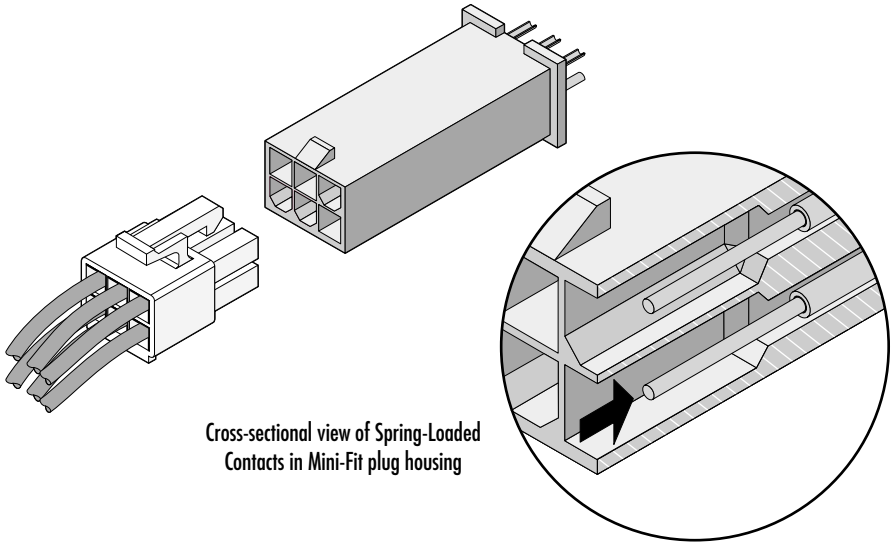

Cross-sectional view of Spring-Loaded Contacts in Mini-Fit plug housing

ORDERING INFORMATION

Circuit Size	Order No.
4	44281-0001
6	44281-0002
8	44281-0003
10	44281-0004
12	44281-0005
14	44281-0006
16	44281-0007
18	44281-0008
20	44281-0009
22	44281-0010
24	44281-0011
36	44281-0012
40	44281-0013

MATING INFORMATION

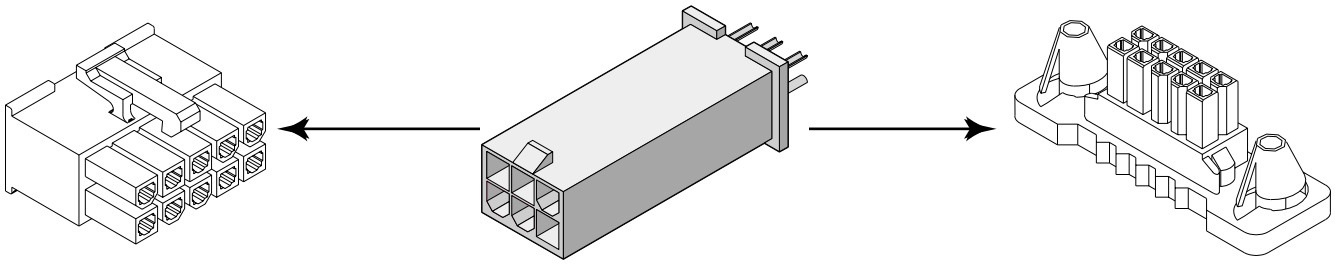

Mini-Fit Jr.
5557 Series

Mini-Fit Test Plug
44281 Series

Mini-Fit, BMI
42474 Series

Americas Headquarters
Lisle, Illinois 60532 U.S.A.
Tel:1-800-78MOLEX
Fax:630-969-1352

Far East North Headquarters
Yamato, Kanagawa, Japan
Tel:81-462-65-2324
Fax:81-462-65-2366

Far East South Headquarters
Jurong, Singapore
Tel:65-268-6868
Fax:65-265-6044

European Headquarters
Munich, Germany
Tel:49-89-413092-0
Fax:49-89-401527

Corporate Headquarters
2222 Wellington Ct.
Lisle, IL 60532 U.S.A.
Tel:630-969-4550

Visit our Web site at http://www.molex.com

Order No. USA-053 Rev. 1

Printed in USA/500/JI/JI/2000.10

©2000, Molex