This document was generated on 01/20/2014

PLEASE CHECK WWW.MOLEX.COM FOR LATEST PART INFORMATION

Part Number: 44133-0800
Status: Active
Overview: Micro-Fit 3.0™ Connectors
Description: Micro-Fit 3.0 BMI™ Receptacle Housing, Dual Row, Panel Mount, 8 Circuits, PBT Polyester, UL 94V-0

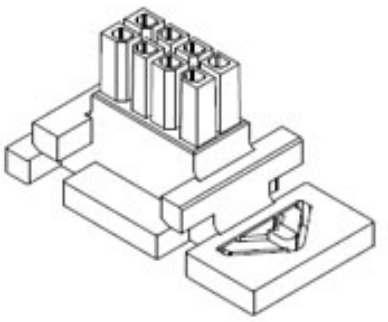

Series image - Reference only

Documents:

3D Model
Drawing (PDF)
Product Specification PS-44300-001 (PDF)
RoHS Certificate of Compliance (PDF)
Product Literature (PDF)

Agency Certification

CSA	LR19980
TUV	R72081037
UL	E29179

General

Product Family	Crimp Housings
Series	44133
Application	Power, Wire-to-Board, Wire-to-Wire
Overview	Micro-Fit 3.0™ Connectors
Product Literature Order No	987650-5984
Product Name	Micro-Fit 3.0 BMI™
UPC	800754807975

Physical

Circuits (maximum)	8
Color - Resin	Black
Flammability	94V-0
Gender	Female
Glow-Wire Compliant	No
Lock to Mating Part	None
Material - Resin	Polyester
Net Weight	2.136/g
Number of Rows	2
Packaging Type	Bag
Panel Mount	Yes
Pitch - Mating Interface	3.00mm
Polarized to Mating Part	Yes
Stackable	No
Temperature Range - Operating	-40°C to +105°C

Electrical

Current - Maximum per Contact	5A

Material Info

Reference - Drawing Numbers

Product Specification	PS-44300-001, RPS-44300-001
Sales Drawing	SD-44133-001

EU RoHS
ELV and RoHS Compliant
REACH SVHC
Contains SVHC: No
Low-Halogen Status
Not Low-Halogen

China RoHS

Need more information on product environmental compliance?

Email productcompliance@molex.com
For a multiple part number RoHS Certificate of Compliance, click here

Please visit the Contact Us section for any non-product compliance questions.

Search Parts in this Series
44133Series

Mates With
44300-0800 Panel Mount Plug, 44432 Micro-Fit 3.0 BMI Vertical 8 Circuit Headers, 44428 Micro-Fit 3.0 BMI Right Angle 8 Circuit Headers, 45280 Micro-Fit 3.0 BMI CPI™ Vertical 8 Circuit Headers

Use With
Micro-Fit 3.0™ Crimp Terminal 43030 , 46235 , 45773

This document was generated on 01/20/2014

PLEASE CHECK WWW.MOLEX.COM FOR LATEST PART INFORMATION