This document was generated on 06/07/2010

PLEASE CHECK WWW.MOLEX.COM FOR LATEST PART INFORMATION

Part Number: 0432028918
Status: Active
Overview: modular_plugs_jacks
Description: Modular Jack, Right Angle, Low Profile, Shielded, Offset Panel Grounding Tabs, with Bottom Grounding Tab, Front Position PCB Ground Tab, 8/8

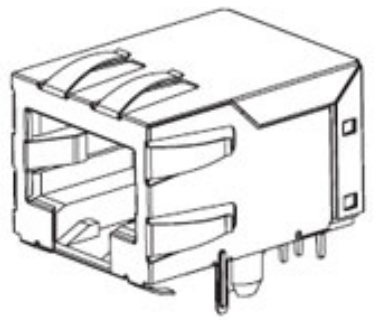

Series image - Reference only

Documents:

3D Model
Drawing (PDF)
Product Specification PS-43202-001 (PDF)
RoHS Certificate of Compliance (PDF)

Agency Certification

CSA	LR19980
UL	E107635

General

Product Family	Modular Jacks/Plugs
Series	43202
Comments	Enhanced panel grounding tabs
Component Type	PCB Jack
Magnetic	No
Overview	modular_plugs_jacks
Performance Category	3
Power over Ethernet (PoE)	N/A
Product Name	RJ45

Physical

Color - Resin	Black
Durability (mating cycles max)	500
Flammability	94V-0
Inverted / Top Latch	No
Lightpipes/LEDs	None
Material - Metal	Brass, Phosphor Bronze
Material - Plating Mating	Gold
Material - Plating Termination	Tin
Material - Resin	High Temperature Thermoplastic
Orientation	Right Angle (Side Entry)
PCB Retention	Yes
PCB Thickness Recommended (in)	0.062 In
PCB Thickness Recommended (mm)	1.60 mm
Packaging Type	Tray
Panel Mount	With Flange
Pitch - Mating Interface (in)	0.050 In
Pitch - Mating Interface (mm)	1.27 mm
Plating min: Mating (µin)	50
Plating min: Mating (µm)	1.25
Plating min: Termination (µin)	100
Plating min: Termination (µm)	2.5
Ports	1
Positions / Loaded Contacts	8/8
Surface Mount Compatible (SMC)	Yes
Temperature Range - Operating	-40°C to +85°C
Termination Interface: Style	Through Hole
Wire/Cable Type	N/A

Electrical

Current - Maximum per Contact	1.5A

EU RoHS
ELV and RoHS Compliant
REACH SVHC
Not Reviewed
Halogen-Free Status
Not Reviewed

China RoHS

Need more information on product environmental compliance?

Email productcompliance@molex.com
For a multiple part number RoHS Certificate of Compliance, click here

Please visit the Contact Us section for any non-product compliance questions.

Search Parts in this Series
43202Series

Mates With
FCC 68 Plugs

Grounding to PCB	Yes
Grounding to Panel	Offset Panel Ground Tabs
Shielded	Yes
Voltage - Maximum	125V

Solder Process Data

Lead-free Process Capability	Wave Capable (TH only)

Material Info

Reference - Drawing Numbers

Packaging Specification	PK-43202-004
Product Specification	PS-43202-001, RPS-43202-002
Sales Drawing	SDA-43202

This document was generated on 06/07/2010

PLEASE CHECK WWW.MOLEX.COM FOR LATEST PART INFORMATION

NOTES:
1) MATERIAL:
HOUSING: NYLON(PA), GLASS FILLED, UL94V-0, COLOR: SEE SHEETS 5 AND 6
INSULATOR: NYLON(PA), GLASS FILLED, UL94V-0, COLOR: SEE SHEETS 5 AND 6
TERMINALS: PHOSPHOR BRONZE, .012/ 0.30 THICK
SHIELD: BRASS, .007/ 0.18 THICK
2) FINISH:
TERMINALS:
A = SELECT GOLD IN CONTACT AREA: 50 MICROINCHES / 1.27 MICROMETERS MIN.,
*SELECT TIN IN PC TAIL AREA: 100 MICROINCHES / 2.54 MICROMETERS MIN.,
WITH OVERALL NICKEL UNDERPLATE: 50 MICROINCHES / 1.27 MICROMETERS MIN.
B = SELECT GOLD IN CONTACT AREA: 30 MICROINCHES / 0.76 MICROMETERS MIN.,
*SELECT TIN IN PC TAIL AREA: 100 MICROINCHES / 2.54 MICROMETERS MIN.,
WITH OVERALL NICKEL UNDERPLATE: 50 MICROINCHES / 1.27 MICROMETERS MIN.
*THE PRIMARY SHIPPING CARTON WILL BE LABELED "COMPLIANT TO RoHS DIRECTIVE 2002/95/EC AND ELV ANNEX II OF DIRECTIVE 2000/53/EC". CARTONS WITHOUT THIS LABEL MAY CONTAIN PRODUCT WITH TIN-LEAD IN THE PC TAILS AND/OR SHIELD.
SHIELD:
100 MICROINCHES / 2.54 MICROMETERS NICKEL OVER 50 MICROINCHES / 1.27 MICROMETERS COPPER UNDERPLATE PCB GROUND TABS DIPPED IN TIN
3) PRODUCT SPECIFICATION AND PROCESSING PARAMETERS: PS-43202.
4) PACKAGING SPECIFICATION:
UNSHIELDED CONNECTOR ASSEMBLIES PACKAGED IN THERMOFORMED TRAYS PER MOLEX PACKAGING SPECIFICATION PK-43202-003.
UNSHIELDED CONNECTOR ASSEMBLIES PACKAGED IN TUBES PER MOLEX PACKAGING SPECIFICATION PK-43202-005.
SHIELDED CONNECTOR ASSEMBLIES PACKAGED IN THERMOFORMED TRAYS PER MOLEX PACKAGING SPECIFICATION PK-43202-004.
5) SEE SHEETS 7 - 9 FOR P.C. BOARD LAYOUTS.
6) CONFORMS TO FCC REGULATION PART 68.5 FOR MODULAR JACKS.
7) THIS PART CONFROMS TO CLASS B REQUIREMENTS OF COSMETIC SPECIFICATION PS-45499-002.

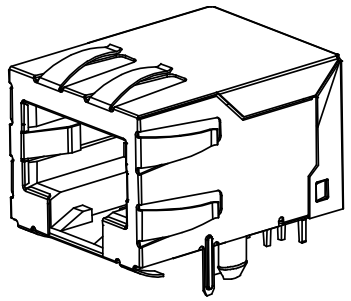

SHIELDED MODULAR JACK SHOWN WITH PANEL GROUND OPTION 'D' AND FRONT PCB GROUND TABS.

DRAWING LEGEND

SHEET 1- NOTES; DRAWING LEGEND
SHEET 2- SHIELDED MODULAR JACK W/ BOTTOM GROUND TABS
SHEET 3- SHIELDED MODULAR JACK W/O BOTTOM GROUND TABS
SHEET 4- UNSHIELDED MODULAR JACK
SHEET 5- PART NUMBER CHARTS
SHEET 6- PART NUMBER CHARTS
SHEET 7- FOOTPRINT LAYOUT FOR 4 POSITION HOUSING
SHEET 8- FOOTPRINT LAYOUT FOR 6 POSITION HOUSING
SHEET 9- FOOTPRINT LAYOUT FOR 8 POSITION HOUSING

REV	DESCRIPTION	
L4	OBS COLORED JACKS	
	EC NO: UCP2008-1189	
	DRWN: JBELL	2007/11/30
	CH'KD: LSCHMIDT	2008/02/20
	APPR: FSMITH	2008/03/04

QUALITY SYMBOLS
▼=0
▽=0

GENERAL TOLERANCES (UNLESS SPECIFIED)

	mm	INCH
4 PLACES	± ---	± ---
3 PLACES	± ---	± .010
2 PLACES	± 0.25	± .014
1 PLACE	± 0.36	± ---
ANGULAR ±1/2°		

DRAFT WHERE APPLICABLE MUST REMAIN WITHIN DIMENSIONS

DIMENSION STYLE: IN/MM
SCALE: 4:1
DESIGN UNITS: INCH
THIRD ANGLE PROJECTION

DRAWN BY: JTR DATE: 1993/03/31
CHECKED BY: JTR DATE: 1993/03/31
APPROVED BY: RAS DATE: 1993/03/31

TITLE: ULTRA LOW PROFILE RIGHT ANGLE MODULAR JACK ASSEMBLY

MOLEX INCORPORATED

MATERIAL NO.: SEE SHTS 5&6
DOCUMENT NO.: SDA-43202
SHEET NO.: 1 OF 9
SIZE: C

THIS DRAWING CONTAINS INFORMATION THAT IS PROPRIETARY TO MOLEX INCORPORATED AND SHOULD NOT BE USED WITHOUT WRITTEN PERMISSION

SH	REV
9	L2
8	L2
7	L2
6	L4
5	L
4	K2
3	L1
2	L1
1	L4

SHIELDED MODULAR JACK W/BOTTOM GROUND TABS

SIZE 8 LOADED 10 VERSION SHOWN

SIDE/TOP GROUND TAB OPTIONS FOR SHIELDS

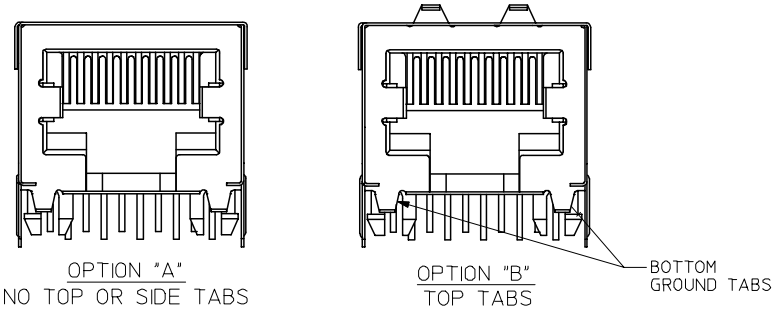

OPTION "A"
NO TOP OR SIDE TABS

OPTION "B"
TOP TABS

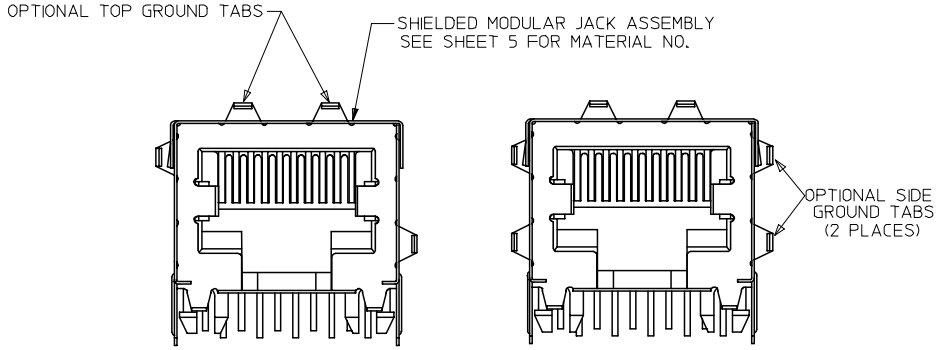

OPTION "C"
TOP AND STAGGERED SIDE TABS

OPTION "D"
TOP AND SIDE TABS

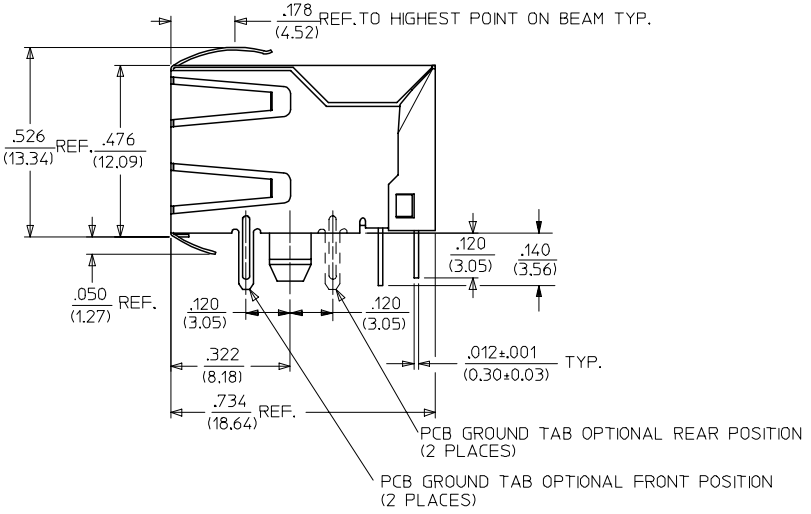

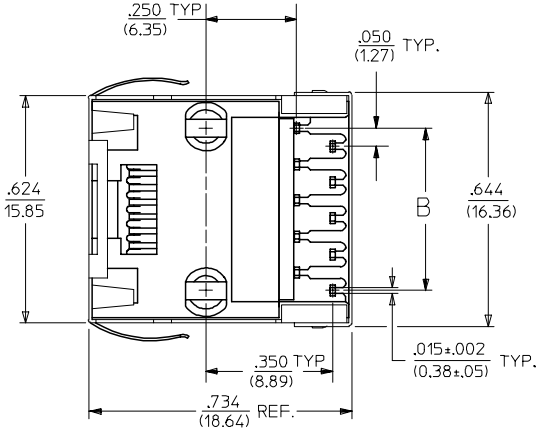

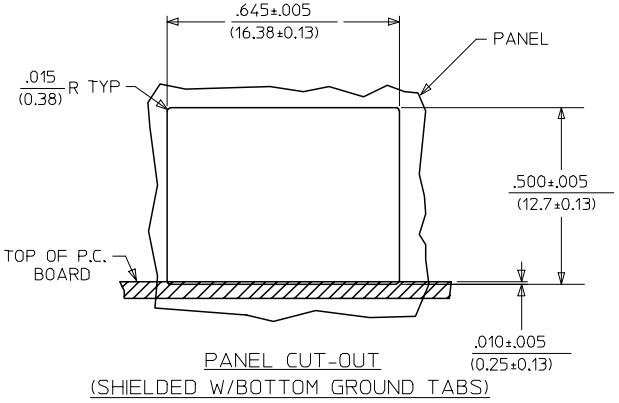

PANEL CUT-OUT
(SHIELDED W/BOTTOM GROUND TABS)

HOUSING SIZE	CIRCUIT SIZE	B
8	10	.450±.005 / 11.43±.13
8	8	.350±.005 / 8.89±.13

SEE SHEET ONE
EC NO: UCP2004-1888
DRWN: LSCHMDT 2004/03/31
CHKD: LSCHMDT 2004/03/31
APPR: FSMITH 2004/03/31
DESCRIPTION
REV
L1

QUALITY SYMBOLS
▼ - 0
Ⓒ - 0

GENERAL TOLERANCES (UNLESS SPECIFIED)

	mm	INCH
4 PLACES	± ---	± ---
3 PLACES	± ---	± .010
2 PLACES	± 0.25	± .014
1 PLACE	± 0.36	± ---
ANGULAR ±1/2°		

DRAFT WHERE APPLICABLE
MUST REMAIN WITHIN DIMENSIONS

SCALE 4:1
DESIGN UNITS INCH
THIRD ANGLE PROJECTION
REVISE ON CAD ONLY
DIMENSION STYLE IN/MM
DRAWN BY JTR DATE 1993/03/31
CHECKED BY JTR DATE 1993/03/31
APPROVED BY RAS DATE 1993/03/31

TITLE
ULTRA LOW PROFILE
RIGHT ANGLE MODULAR JACK
ASSEMBLY

MOLEX INCORPORATED

MATERIAL NO. SEE SHT 5
DOCUMENT NO. SDA-43202
SHEET NO. 2 OF 9

THIS DRAWING CONTAINS INFORMATION THAT IS PROPRIETARY TO MOLEX INCORPORATED AND SHOULD NOT BE USED WITHOUT WRITTEN PERMISSION

C

SHIELDED MODULAR JACKS W/BOTTOM GROUND TABS (SHEET 2)

ASSEMBLY MATERIAL NUMBER	CONNECTOR SIZE	NUMBER OF CIRCUITS	SIDE/TOP PANEL GROUND TAB OPTION	PCB GROUND TAB OPTION	TERMINAL PLATING OPTION	PACKAGING OPTION	HOUSING COLOR
43202-8900	8	10	A	FRONT POSITION	A	TRAY	BLACK
43202-8901	8	10	B	FRONT POSITION	A	TRAY	
43202-8902	8	10	C	FRONT POSITION	A	TRAY	
43202-8903	8	10	D	FRONT POSITION	A	TRAY	
43202-8908	8	10	A	REAR POSITION	A	TRAY	
43202-8909	8	10	B	REAR POSITION	A	TRAY	
43202-8910	8	10	C	REAR POSITION	A	TRAY	
43202-8911	8	10	D	REAR POSITION	A	TRAY	
43202-8916	8	8	A	FRONT POSITION	A	TRAY	
43202-8917	8	8	B	FRONT POSITION	A	TRAY	
43202-8918	8	8	C	FRONT POSITION	A	TRAY	
43202-8919	8	8	D	FRONT POSITION	A	TRAY	
43202-8924	8	8	A	REAR POSITION	A	TRAY	
43202-8925	8	8	B	REAR POSITION	A	TRAY	
43202-8926	8	8	C	REAR POSITION	A	TRAY	
43202-8927	8	8	D	REAR POSITION	A	TRAY	

SEE SHEET 1
EC NO: UCP2004-1347
DRWN: MKAMARA 2004/02/09
CHKD: MKAMARA 2004/02/09
APPR: BWIRKUS 2004/02/10
DESCRIPTION
REV

QUALITY SYMBOLS
▼ - 0
Ⓒ - 0

GENERAL TOLERANCES (UNLESS SPECIFIED)

	mm	INCH
4 PLACES	± ---	± ---
3 PLACES	± ---	± .010
2 PLACES	± 0.25	± .014
1 PLACE	± 0.36	± ---
ANGULAR ±1/2°		

DRAFT WHERE APPLICABLE
MUST REMAIN WITHIN DIMENSIONS

SCALE 4:1
DESIGN UNITS INCH
THIRD ANGLE PROJECTION
REVISE ON CAD ONLY
DIMENSION STYLE IN/MM
DRAWN BY JTR DATE 1993/03/18
CHECKED BY JTR DATE 1993/03/18
APPROVED BY RAS DATE 1993/03/18

TITLE
ULTRA LOW PROFILE RIGHT ANGLE MODULAR JACK ASSEMBLY

molex MOLEX INCORPORATED

MATERIAL NO. SEE CHART
DOCUMENT NO. SDA-43202
SHEET NO. 5 OF 9

THIS DRAWING CONTAINS INFORMATION THAT IS PROPRIETARY TO MOLEX INCORPORATED AND SHOULD NOT BE USED WITHOUT WRITTEN PERMISSION

C

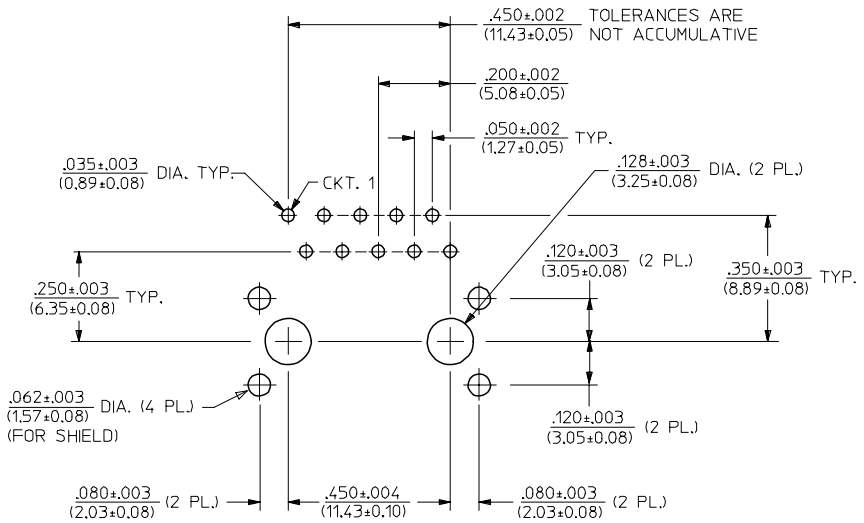

PC BOARD LAYOUT FOR 8 POSITION HOUSING

(10 CIRCUIT FOOTPRINT SHOWN)

(COMPONENT SIDE OF BOARD)

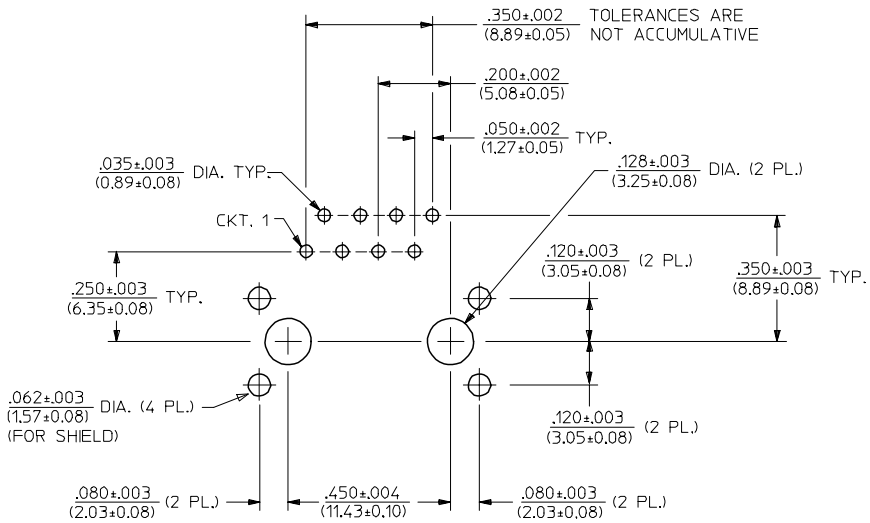

PC BOARD LAYOUT FOR 8 POSITION HOUSING

(8 CIRCUIT FOOTPRINT SHOWN)

(COMPONENT SIDE OF BOARD)

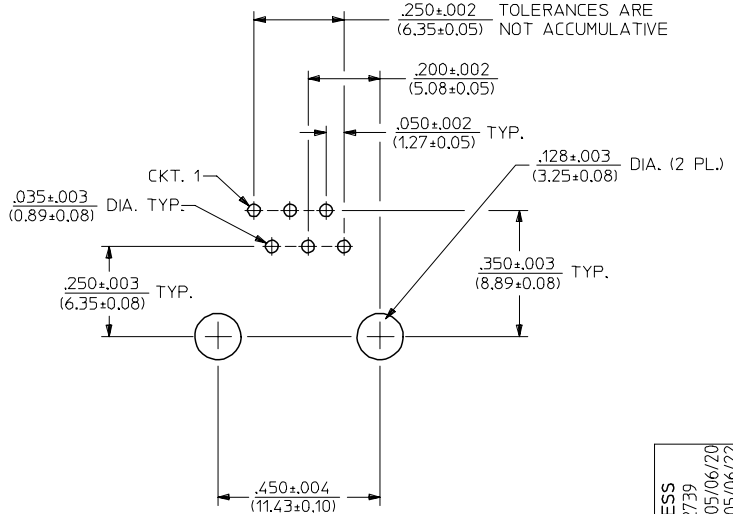

PC BOARD LAYOUT FOR 8 POSITION HOUSING

(6 CIRCUIT FOOTPRINT SHOWN)

(COMPONENT SIDE OF BOARD)

NOTES:
1. RECOMMENDED PCB THICKNESS: .062±.005/(1.57±0.13)

ADD PCB THICKNESS
EC NO: UCP2005-2739
DRWN:LSCHMDT 2005/06/20
CHKD:ELHAG 2005/06/22
APPR:FSMITH 2005/06/23
DESCRIPTION
REV
L2

QUALITY SYMBOLS
▼- 0
▽C- 0

GENERAL TOLERANCES (UNLESS SPECIFIED)

	mm	INCH
4 PLACES	± ---	± ---
3 PLACES	± ---	± .010
2 PLACES	± 0.25	± .014
1 PLACE	± 0.36	± ---
ANGULAR ±1/2°		

DRAFT WHERE APPLICABLE
MUST REMAIN WITHIN DIMENSIONS

SCALE 4:1
DESIGN UNITS INCH
THIRD ANGLE PROJECTION
REVISE ON CAD ONLY
DIMENSION STYLE IN/MM
DRAWN BY L.E.LENZ DATE 1995/03/09
CHECKED BY JTR DATE 1995/03/09
APPROVED BY RAS DATE 1995/03/09

TITLE
ULTRA LOW PROFILE
RIGHT ANGLE MODULAR JACK
ASSEMBLY

MOLEX INCORPORATED

MATERIAL NO. SEE SHTS 5&6
DOCUMENT NO. SDA-43202
SHEET NO. 9 OF 9

THIS DRAWING CONTAINS INFORMATION THAT IS PROPRIETARY TO MOLEX INCORPORATED AND SHOULD NOT BE USED WITHOUT WRITTEN PERMISSION

C