molex
one company > a world of innovation

This document was generated on 05/24/2010

PLEASE CHECK WWW.MOLEX.COM FOR LATEST PART INFORMATION

Part Number: 0430452014
Status: Active
Overview: microfit_30
Description: 3.00mm (.118") Pitch Micro-Fit 3.0™ Header, Surface Mount Compatible, Dual Row, Vertical, with PCB Polarizing Peg, 20 Circuits, 0.76µm (30µ") Gold (Au) Selective Plating, Glow Wire Compatible, with Kinked PC Tails, Glow Wire Compatible

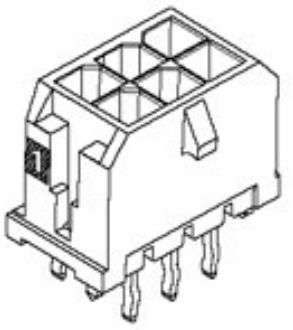

Series image - Reference only

Documents:

- 3D Model
- Drawing (PDF)
- Product Specification PS-43045 (PDF)
- RoHS Certificate of Compliance (PDF)

Agency Certification

CSA	LR19980
TUV	R72081037
UL	E29179

General

Product Family	PCB Headers
Series	43045
Application	Wire-to-Board
Comments	Glow Wire Equivalent Part Number 430452014. High Temperature, Square Pin, Offset Through Hole Mounting, Solder Type
Overview	microfit_30
Product Literature Order No	USA-106
Product Name	Micro-Fit 3.0™

Physical

Breakaway	No
Circuits (Loaded)	20
Circuits (maximum)	20
Color - Resin	Black
Durability (mating cycles max)	30
Flammability	94V-0
Glow-Wire Compliant	Yes
Mated Height (in)	0.680 In
Mated Height (mm)	17.27 mm
Material - Metal	Brass
Material - Plating Mating	Gold
Material - Plating Termination	Tin
Material - Resin	High Temperature Thermoplastic
Number of Rows	2
Orientation	Vertical
PCB Locator	Yes
PCB Retention	Yes
PCB Thickness Recommended (in)	0.062 In
PCB Thickness Recommended (mm)	1.60 mm
Packaging Type	Tray
Pitch - Mating Interface (in)	0.118 In
Pitch - Mating Interface (mm)	3.00 mm
Plating min: Mating (µin)	30
Plating min: Mating (µm)	0.75
Plating min: Termination (µin)	100
Plating min: Termination (µm)	2.5
Polarized to PCB	Yes
Shrouded	Fully

EU RoHS
ELV and RoHS Compliant
REACH SVHC
Contains SVHC: No
Halogen-Free Status
Halogen-Free

China RoHS

Need more information on product environmental compliance?

Email productcompliance@molex.com
For a multiple part number RoHS Certificate of Compliance, click here

Please visit the Contact Us section for any non-product compliance questions.

Search Parts in this Series
43045Series

Mates With
43025

Stackable	No
Surface Mount Compatible (SMC)	Yes
Temperature Range - Operating	-40°C to +105°C
Termination Interface: Style	Through Hole - Kinked Pin

Electrical

Current - Maximum per Contact	5A
Voltage - Maximum	250V

Solder Process Data

Duration at Max. Process Temperature (seconds)	30
Lead-free Process Capability	SMC & Wave Capable (TH only)
Max. Cycles at Max. Process Temperature	3
Process Temperature max. C	260

Material Info

Reference - Drawing Numbers

Packaging Specification	PK-70873-0314
Product Specification	PS-43045, RPS-43045-003, RPS-43045-004
Sales Drawing	SD-43045-005
Test Summary	TS-43045-001, TS-43045-002

This document was generated on 05/24/2010

PLEASE CHECK WWW.MOLEX.COM FOR LATEST PART INFORMATION

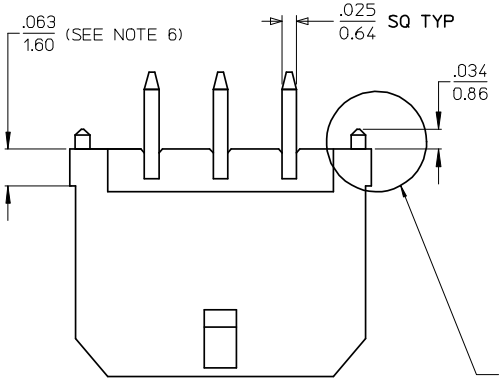

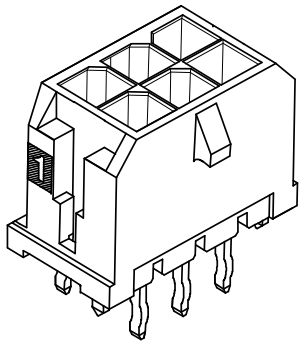

NOTE : (2) POLARIZATION PEGS ARE SHOWN.
HOWEVER, ASSEMBLIES MAY BE MANUFACTURED
WITH (1) PEG ONLY.

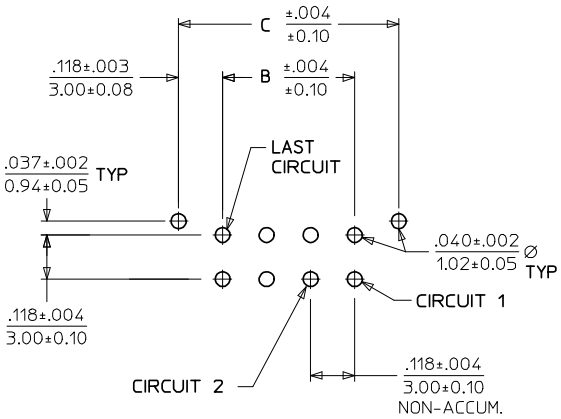

PCB LAYOUT: COMPONENT SIDE
RECOMMEND PCB THICKNESS: .062/1.57

CKTS	A (SEE NOTE 6)	B	C
02	.262 / 6.65	NA	.236 / 6.00
04	.380 / 9.65	.118 / 3.00	.354 / 9.00
06	.498 / 12.65	.236 / 6.00	.472 / 12.00
08	.616 / 15.65	.354 / 9.00	.591 / 15.00
10	.734 / 18.65	.472 / 12.00	.709 / 18.00
12	.852 / 21.65	.591 / 15.00	.827 / 21.00
14	.970 / 24.65	.709 / 18.00	.945 / 24.00
16	1.088 / 27.65	.827 / 21.00	1.063 / 27.00
18	1.206 / 30.65	.945 / 24.00	1.181 / 30.00
20	1.325 / 33.65	1.063 / 27.00	1.299 / 33.00
22	1.443 / 36.65	1.181 / 30.00	1.417 / 36.00
24	1.561 / 39.65	1.299 / 33.00	1.535 / 39.00

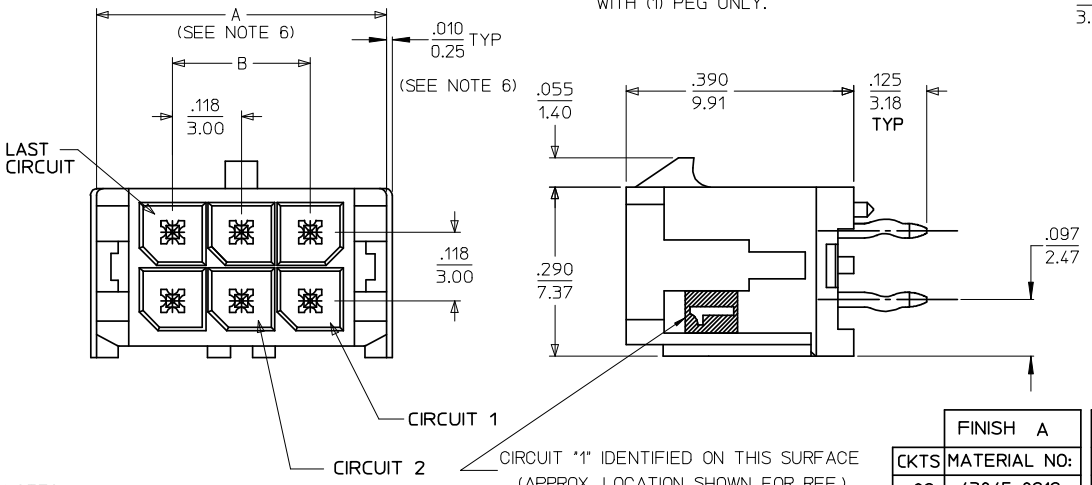

CKTS	FINISH A MATERIAL NO:	FINISH B MATERIAL NO:	FINISH C MATERIAL NO:
02	43045-0212	43045-0213	43045-0214
04	43045-0412	43045-0413	43045-0414
06	43045-0612	43045-0613	43045-0614
08	43045-0812	43045-0813	43045-0814
10	43045-1012	43045-1013	43045-1014
12	43045-1212	43045-1213	43045-1214
14	43045-1412	43045-1413	43045-1414
16	43045-1612	43045-1613	43045-1614
18	43045-1812	43045-1813	43045-1814
20	43045-2012	43045-2013	43045-2014
22	43045-2212	43045-2213	43045-2214
24	43045-2412	43045-2413	43045-2414

NOTES:

1. HOUSING MATERIAL: GLASS FILLED LIQUID CRYSTAL POLYMER, UL94V-0, COLOR: BLACK
   TERMINAL MATERIAL: BRASS ALLOY
2. FINISH: A = .000100/(0.00254) MIN. TIN OVER .000050/(0.00127) MIN. NICKEL PLATE.
   B = .000015/(0.00038) MIN. SELECT GOLD IN CONTACT AREA; .000100/(0.00254) MIN. SELECT MATTE TIN ON SOLDER TAILS; BOTH OVER .000050/(0.00127) MIN. NICKEL PLATE.
   C = .000030/(0.00076) MIN. SELECT GOLD IN CONTACT AREA; .000100/(0.00254) MIN. SELECT MATTE TIN ON SOLDER TAILS; BOTH OVER .000050/(0.00127) MIN. NICKEL PLATE.
   * THE PRIMARY SHIPPING CARTON WILL BE LABELED "COMPLIANT TO RoHS DIRECTIVE 2002/95/EC AND ELV ANNEX II OF DIRECTIVE 2000/53/EC." CARTONS WITHOUT THIS LABEL MAY CONTAIN PRODUCT WITH TIN/LEAD IN THE PC TAIL AREA.
3. PRODUCT SPECIFICATION: PS-43045
4. MATES WITH MICRO FIT (3.0) RECEPTACLE SERIES 43025
5. TRAY PACKAGED: SEE MOLEX DRAWING PK-70873-0314
6. .010/0.25 OFFSETS ARE PRESENT ON ALL PARTS MANUFACTURED AFTER 11/1/2007, AND ON PARTS PRIOR TO 11/1/2007 THAT CONTAIN A GREEN DOT ON THE PRIMARY SHIPPING CARTON LABEL.
7. THIS PART CONFORMS TO CLASS B REQUIREMENTS OF COSMETIC SPECIFICATION PS-45499-002.

ADD .097 DIM, NOTE 8 — 2007/12/19
EC NO: UCP2008-0324 — 2007/12/20
DRWN:MKIPPER — 2007/12/21
CH'KD:SSOUSEK
APPR:FSMITH
DESCRIPTION
REV: F1

QUALITY SYMBOLS
▼=0
▽=0

GENERAL TOLERANCES (UNLESS SPECIFIED)

	mm	INCH
4 PLACES	± ---	± ---
3 PLACES	± ---	± .010
2 PLACES	± 0.25	± .014
1 PLACE	± 0.36	± ---
ANGULAR ±1/2°		

DRAFT WHERE APPLICABLE MUST REMAIN WITHIN DIMENSIONS

DIMENSION STYLE: IN/MM
SCALE: ---
DESIGN UNITS: METRIC
THIRD ANGLE PROJECTION

DRAWN BY: SAMIEC — DATE: 2000/03/15
CHECKED BY: MUELLER — DATE: 2000/03/15
APPROVED BY: EDGLEY — DATE: 2000/03/15

TITLE: MICRO FIT (3.0) DUAL ROW VERTICAL THRU HOLE HEADER ASS'Y

MOLEX INCORPORATED

MATERIAL NO.: SEE CHART
DOCUMENT NO.: SD-43045-005
SHEET NO.: 1 OF 1
SIZE: C

THIS DRAWING CONTAINS INFORMATION THAT IS PROPRIETARY TO MOLEX INCORPORATED AND SHOULD NOT BE USED WITHOUT WRITTEN PERMISSION