Product Specification

PE42742

75 Ω Terminated, 5 - 2200 MHz SPDT CATV UltraCMOS™ Switch Featuring Unpowered Operation

Product Description

The PE42742 is an SPDT UltraCMOS™ switch designed for broadband applications such as CATV, DTV, Multi-Tuner DVR (Digital Video Recorder), Set-top Box, PCTV and Game Boxes. It meets FCC 15.115 spec of 80 dB isolation @ 216 MHz and offers high isolation and low insertion loss in both a powered and a unique unpowered default state. The PE42742 covers a broad frequency range from 5 MHz to beyond 2200 MHz with a single positive supply and CMOS control. It provides a smaller, cost effective, more reliable and manufacturable alternative to mechanical relays in set-top box applications.

The PE42742 is manufactured on Peregrine's UltraCMOS™ process, a patented variation of silicon-on-insulator (SOI) technology on a sapphire substrate, offering the performance of GaAs with the economy and integration of conventional CMOS.

Features

- Meets FCC 15.115 spec of 80 dB isolation @ 216 MHz
- Unpowered operational state
- 3500 V HBM ESD tolerance, all pins
- CTB performance of 90 dBc
- High isolation: 63 dB @ 1000 MHz
- Low insertion loss: typically 0.5 dB @ 5 MHz, 0.8 dB @ 1000 MHz
- CMOS single-pin control with logic select
- Single +3 volt supply operation
- Low current consumption: 8 µA

Figure 1. Functional Diagram

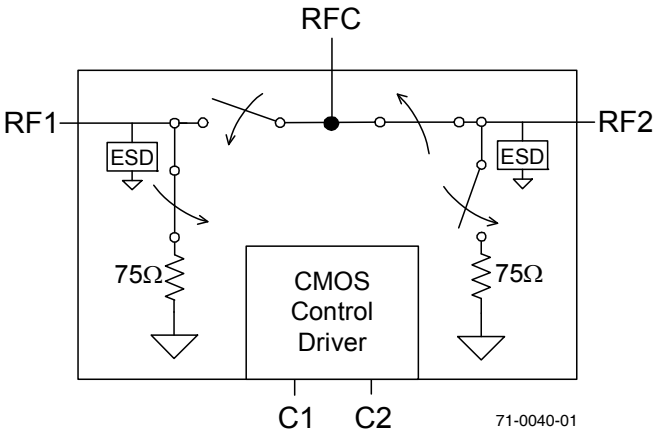

Figure 2. Package Type
20-lead 4x4mm QFN



©2006-2012 Peregrine Semiconductor Corp. All rights reserved.

Table 1. Electrical Specifications @ +25°C, V_{DD} = +3V (Z_S = Z_L = 75 Ω)

Parameter	Condition	Minimum	Typical	Maximum	Units
Operating Frequency		5		2200	MHz
RF1-RFC Insertion Loss	220 MHz		0.45	0.55	dB
	550 MHz		0.55	0.65	dB
	810 MHz		0.7	0.8	dB
	1000 MHz		0.75	0.85	dB
	2200 MHz		1.7	1.8	dB
RF2-RFC Insertion Loss	220 MHz		0.7	0.8	dB
	550 MHz		0.8	0.9	dB
	810 MHz		0.9	1	dB
	1000 MHz		1.0	1.1	dB
	2200 MHz		1.8	1.9	dB
Isolation RF1 to RF2 (RFC-RF1 ON)	220 MHz	81	94		dB
	550 MHz	77	82		dB
	810 MHz	71.5	76		dB
	2200 MHz	50	53.6		dB
Isolation RF1 to RF2 (RFC-RF2 ON)	220 MHz	81	92		dB
	550 MHz	75	79		dB
	810 MHz	70.5	75		dB
	2200 MHz	50	53		dB
Isolation RF1 to RFC (RFC-RF2 ON)	220 MHz	71	74		dB
	550 MHz	64	66		dB
	810 MHz	62	64		dB
	2200 MHz	52	57		dB
Isolation RF2 to RFC (RFC-RF1 ON)	220 MHz	70.5	73		dB
	550 MHz	64	66		dB
	810 MHz	61.5	63		dB
	2200 MHz	51	55		dB
IP2 RF1/RF2[2]	5 MHz – 1000 MHz		90/90		dBm
IIP3 RF1/RF2[2]	5 MHz – 1000 MHz		53/53		dBm
Input 1 dB Compression RF1/RF2[2]	1000 MHz	30/24.5	32/26.5		dBm
CTB / CSO (Powered/Unpowered)	77 & 110 channels; Power Out = 44 dBmV		-90 / -77		dBc
Switching time	50 % CTRL to 10 / 90 RF		3		µs
Video Feedthrough[3]	5 MHz – 1000 MHz		20		mVpp

Table 2. Electrical Characterization (Unpowered Operation)[5]

Parameter	Condition	Minimum	Typical	Maximum	Units
Operating Frequency[1]		5		2200	MHz
Isolation RF1 to RF2[4]	220 MHz	81	90.5	-	dB
	550 MHz	77	81.5	-	dB
	810 MHz	70.5	77	-	dB
	2200 MHz	49	52.5	-	dB

Notes: 1. Device linearity will begin to degrade with input signals below 5 MHz
2. Measured in a 50 Ω system
3. Measured with a 1 ns risetime, 0/3 V pulse and 500 MHz bandwidth
4. Minimum per FCC 15.115 spec
5. See *Figure 9* for Power-Off insertion loss of RFC-RF1

©2006-2012 Peregrine Semiconductor Corp. All rights reserved.

Figure 3. Pin Configuration (Top View)

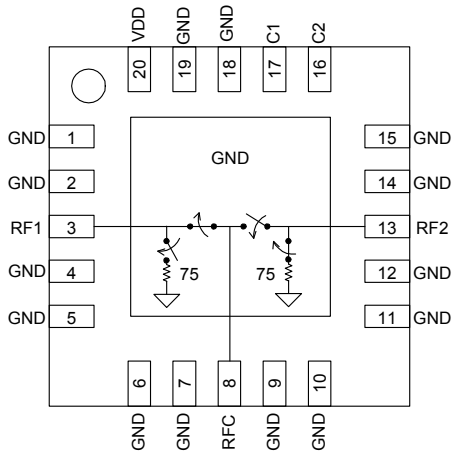

Table 3. Pin Descriptions

No.	Name	Description
1, 2, 4-7, 9-12, 14, 15, 18, 19	GND	RF Ground
3	RF1[1]	RF I/O
8	RFC[1]	RF Common
13	RF2[1]	RF I/O
16	C2[2]	Control 2 (or logic select)
17	C1[2]	Control 1 (or logic select)
20	VDD	Supply
Pad	GND	RF Ground Pad

Notes: 1. RF pins 3, 8, and 13 must be at 0 VDC. The RF pins do not require DC blocking capacitors for proper operation if the 0V DC requirement is met.
2. Pins 16 and 17 can be set for single pin or complementary pin control.

Moisture Sensitivity Level

The Moisture Sensitivity Level rating for the PE42742 in the 20-lead QFN package is MSL1.

Table 4. Operating Conditions @ 25°C

Parameter	Min	Typ	Max	Unit
V_{DD} Power Supply	2.7	3.0	3.3	V
I_{DD} Power Supply Current (V_{DD} = 3V, V_{CNTL} = 3V)		8		µA
Control Voltage High	0.7 x V_{DD}		V_{DD}	V
Control Voltage Low	0		0.3 x V_{DD}	V

Table 5. Absolute Maximum Ratings

Symbol	Parameter/Condition	Min	Max	Unit
V_{DD}	Power supply voltage	-0.3	4.0	V
V_I	Voltage on any DC input	-0.3	V_{DD} + 0.3	V
P_{RF}	RF power on RFC, RF1, RF2 Terminated/Through		24/33	dBm
T_{ST}	Storage temperature	-65	+150	°C
T_{OP}	Operating temperature	-40	+85	°C
V_{ESD}	HBM[1] ESD Voltage RF Pins		3500	V
	HBM[1] ESD Voltage Digital Pins		3500	
	MM[2] ESD Voltage all pins		150	

Notes: 1. ML_STD 883 Method 3015.7
2. JEDEC JESD22-A114-B

Exceeding absolute maximum ratings may cause permanent damage. Operation should be restricted to the limits in the Operating Ranges table. Operation between operating range maximum and absolute maximum for extended periods may reduce reliability.

Electrostatic Discharge (ESD) Precautions

When handling this UltraCMOS™ device, observe the same precautions that you would use with other ESD-sensitive devices. Although this device contains circuitry to protect it from damage due to ESD, precautions should be taken to avoid exceeding the rating specified.

Latch-Up Avoidance

Unlike conventional CMOS devices, UltraCMOS™ devices are immune to latch-up.

Switching Frequency

The PE42742 has a maximum 25 kHz switching rate.

©2006-2012 Peregrine Semiconductor Corp. All rights reserved.

Table 6. Truth Table

V_{DD}	C1 (pin 17)	C2 (pin 16)	RFC – RF1	RFC – RF2
OFF	Low	Low	ON	OFF
ON	Low	Low	ON	OFF
ON	Low	High	OFF	ON
ON	High	Low	OFF	ON
ON	High	High	ON	OFF

Note: A versatile logic table has been established to allow either C1 or C2 act as a single pin control and in either polarity.

Typical Applications

The PE42742 provides the high isolation required by FCC part 15.115 regulation between the television antenna and the cable plant. The advantage of the PE42742 is that device isolation / thru performance is maintained when power is removed. This unique feature makes the PE42742 ideal for set-top box and VCR applications. The PE42742 supports signal flow from RFC to RF1 and RF2 termination in the unpowered state; similar to the powered state with C1=C2 (both high or low).

Figure 4. Typical Application (1 of 4)

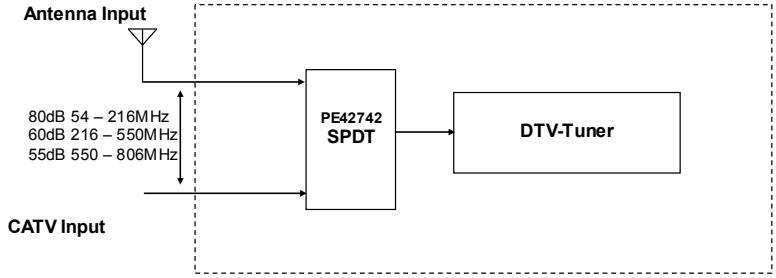

Figure 5. Typical Application (2 of 4)

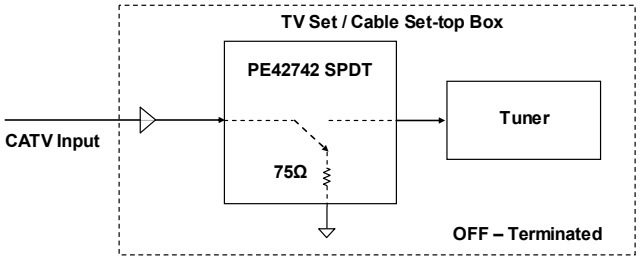

Figure 6. Typical Application (3 of 4)

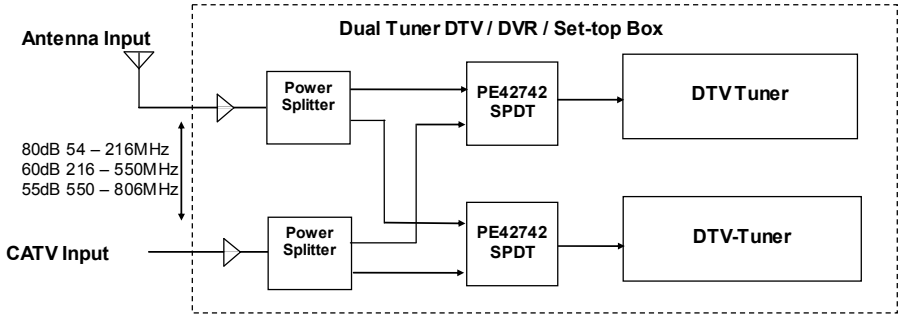

Figure 7. Typical Application (4 of 4)

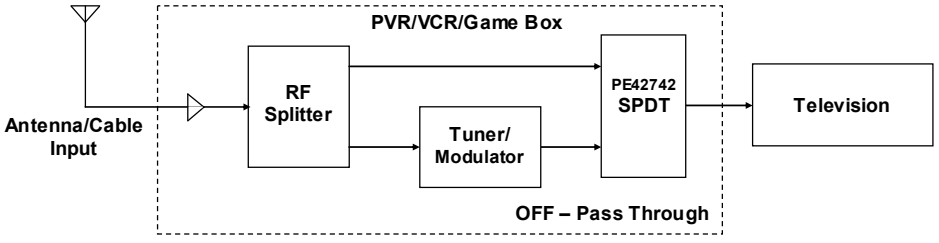

©2006-2012 Peregrine Semiconductor Corp. All rights reserved.

Typical Performance Data @ 25°C, 75 Ω

Figure 8. Insertion Loss – Power On

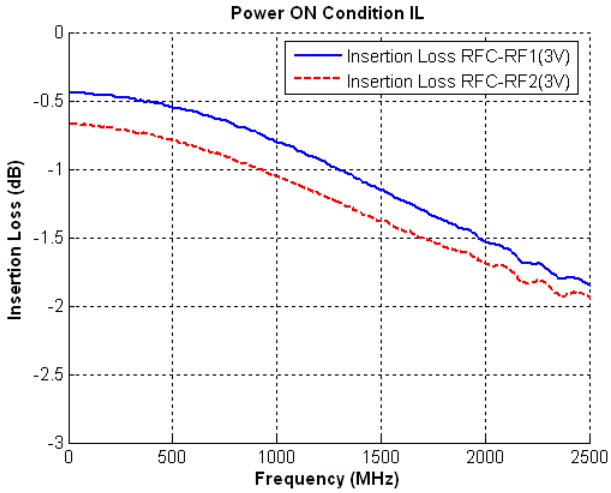

Figure 9. Insertion Loss – Power Off

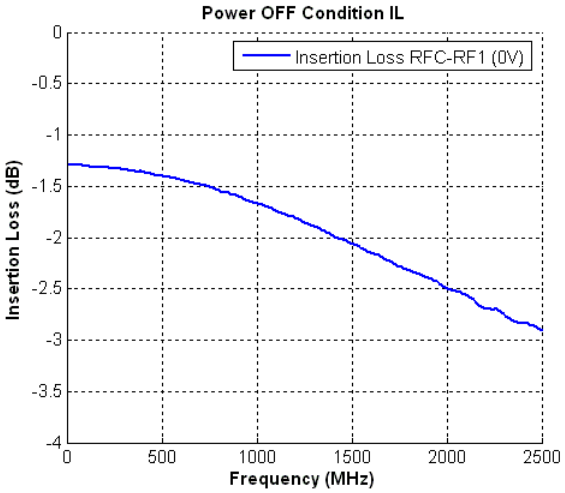

Figure 10. Isolation - Power On

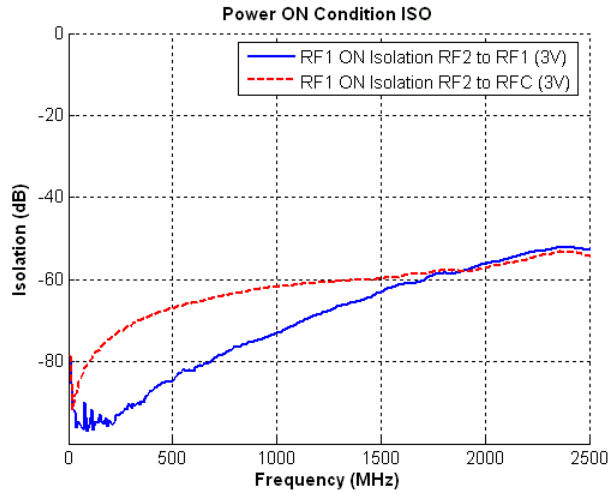

Figure 11. Isolation - Power Off

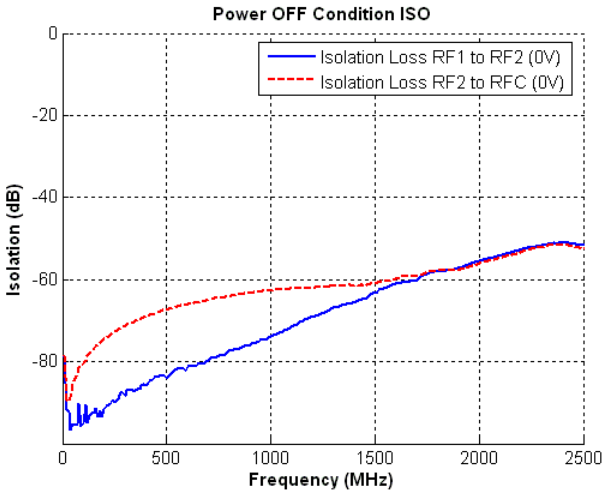

©2006-2012 Peregrine Semiconductor Corp. All rights reserved.

Typical Performance Data @ 25°C, 75 Ω

Figure 12. Isolation: RF2 – Power On

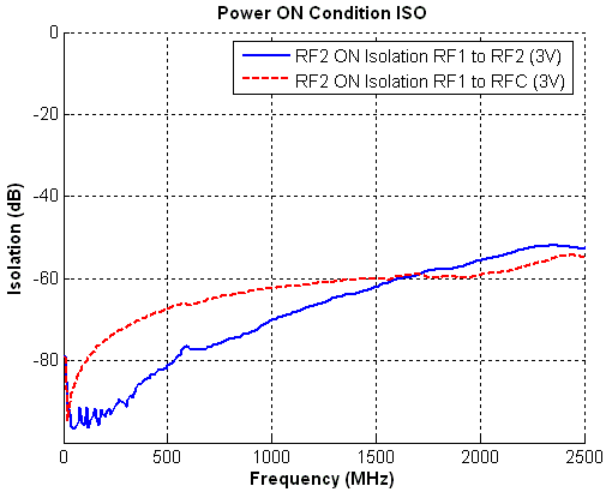

Figure 13. Return Loss: RF1

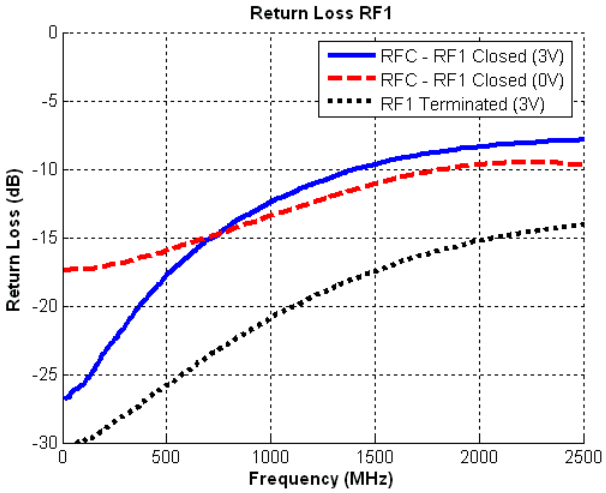

Figure 14. Return Loss: RF2

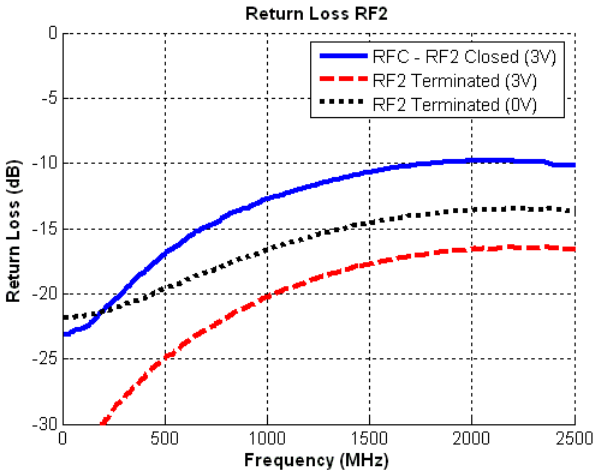

Figure 15. Return Loss: RFC

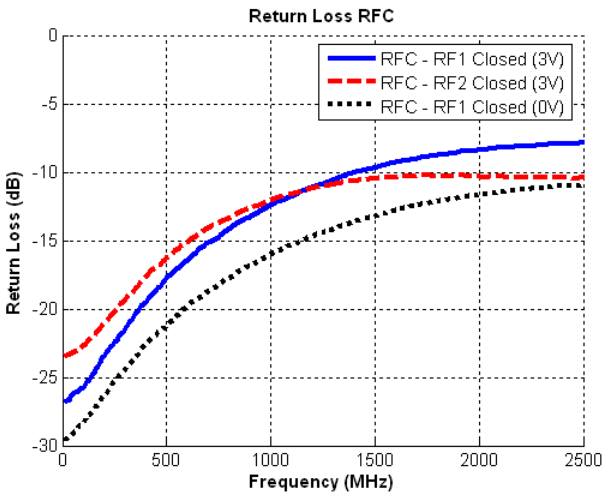

©2006-2012 Peregrine Semiconductor Corp. All rights reserved.

Typical Performance Data @ 25°C, 75 Ω

Figure 16. Input IP3: RFC-RF1/RF2

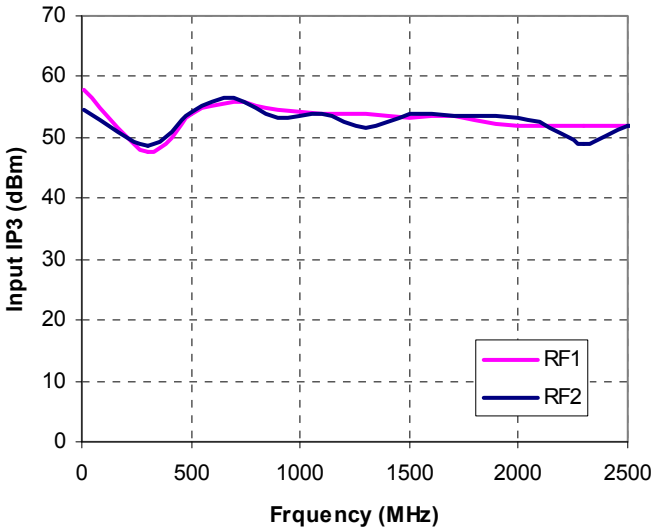

Figure 17. P_1dB Compression: RFC-RF1/RF2

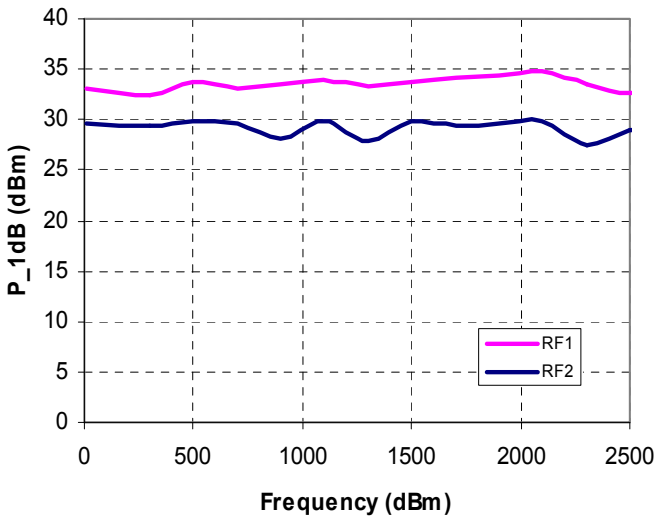

©2006-2012 Peregrine Semiconductor Corp. All rights reserved.

Evaluation Kit

The SPDT Switch Evaluation Kit facilitates customer evaluation of the PE42742 SPDT switch. The RF common port is connected through a 75 Ω transmission line to J2. Ports 1 and 2 are connected through 75 Ω transmission lines to J1 and J3. A through line connects F connectors J4 and J5. This transmission line can be used to estimate the PCB loss over the environmental conditions. J6 provides DC and digital inputs to the device.

The board is composed of a two metal layer FR4 material with a total thickness of 0.032". The transmission lines are hybrid microstrip/coplanar waveguide with ground plane (28 mil core, 12 mil width, 12 mil gap).

The provided jumpers short the control pins to ground for logic low. With the jumper removed the control input rises to V_{DD} for logic high through the 1 MΩ pull up resistor. These resistors will draw several microamps from V_{DD}. They are not required for normal operation.

Figure 18. Evaluation Board Layouts

Peregrine Specification 101/0269

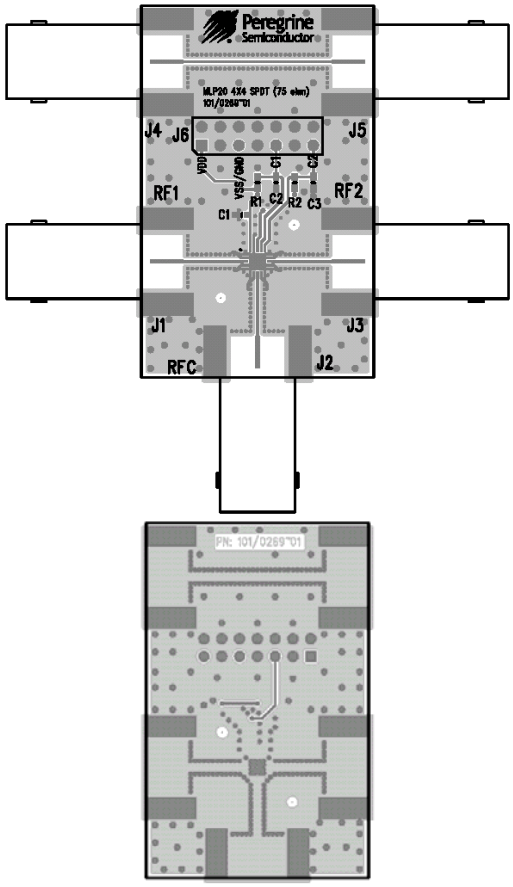

Figure 19. Evaluation Board Schematic

Peregrine Specification 102/0352

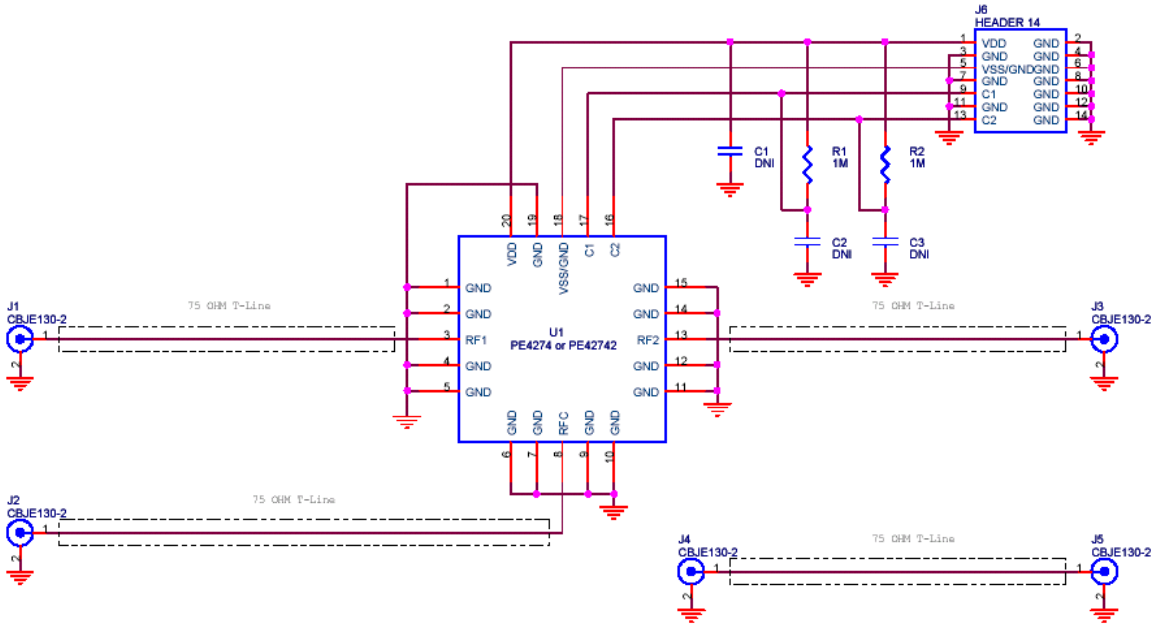

©2006-2012 Peregrine Semiconductor Corp. All rights reserved.

Figure 20. Package Drawing

4x4 mm 20-lead QFN, BOM 19/0106

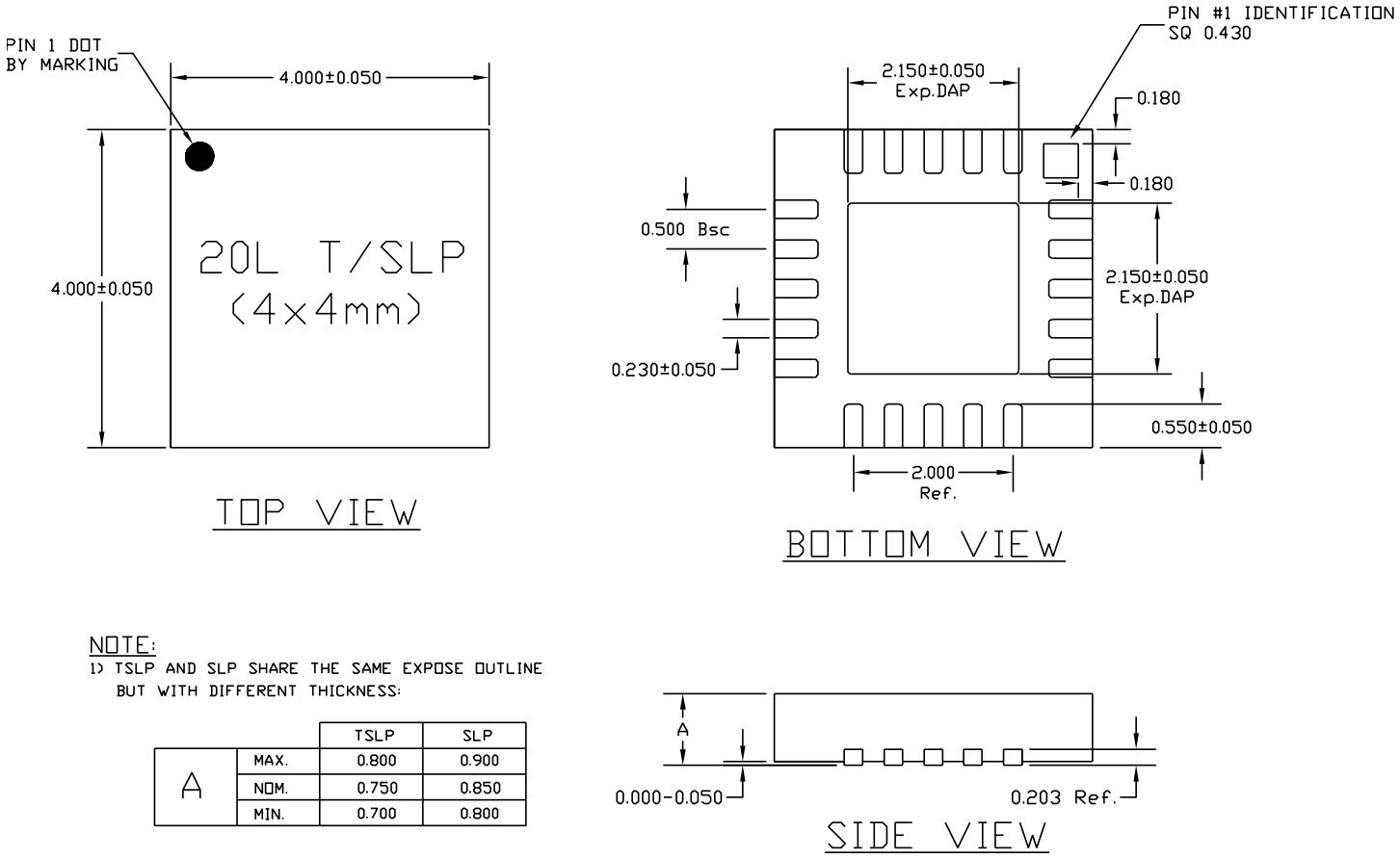

		TSLP	SLP
A	MAX.	0.800	0.900
	NOM.	0.750	0.850
	MIN.	0.700	0.800

Note: PE42742 uses the SLP dimensions.

Figure 21. Marking Specification

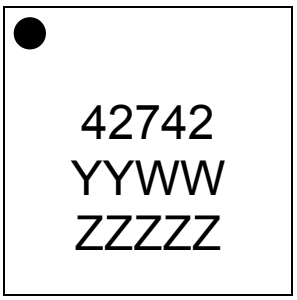

YYWW = Date Code (Year, Work Week)
ZZZZZ = Last five digits of PSC Lot Number

©2006-2012 Peregrine Semiconductor Corp. All rights reserved.

Figure 22. Tape and Reel Drawing

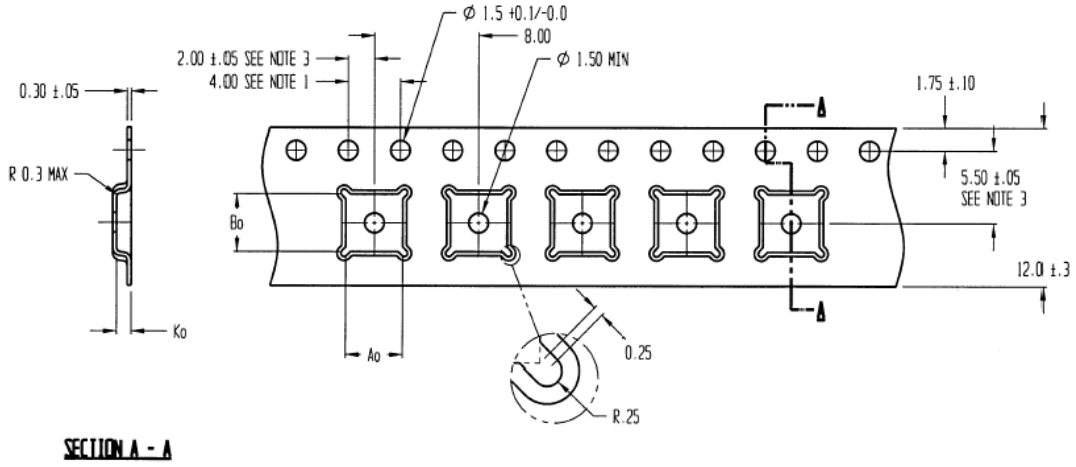

Tape Feed Direction

NOTES:
1. 10 SPROCKET HOLE PITCH CUMULATIVE TOLERANCE ±0.2
2. CAMBER IN COMPLIANCE WITH EIA 481
3. POCKET POSITION RELATIVE TO SPROCKET HOLE MEASURED AS TRUE POSITION OF POCKET, NOT POCKET HOLE

A_0 = 4.35
B_0 = 4.35
K_0 = 1.1

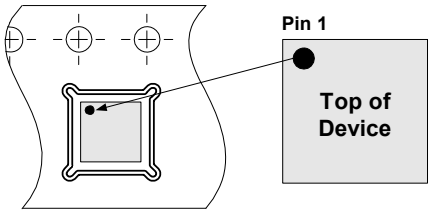

Device Orientation in Tape

Table 7. Ordering Information

Order Code	Part Marking	Description	Package	Shipping Method
PE42742MLIBB	42742	PE42742G-20 QFN 4x4mm-cut off tape and reel	Green 20-lead 4x4mm QFN	Cut tape or loose
PE42742MLIBB-Z	42742	PE42742G-20 QFN 4x4mm-3000C	Green 20-lead 4x4mm QFN	3000 units / T&R
EK42742-03	PE42742-EK	PE42742-20 QFN 4x4mm-EK	Evaluation Kit	1 / Box

Sales Contact and Information

For Sales and contact information please visit www.psemi.com.

Advance Information: The product is in a formative or design stage. The datasheet contains design target specifications for product development. Specifications and features may change in any manner without notice. ***Preliminary Specification:*** The datasheet contains preliminary data. Additional data may be added at a later date. Peregrine reserves the right to change specifications at any time without notice in order to supply the best possible product. ***Product Specification:*** The datasheet contains final data. In the event Peregrine decides to change the specifications, Peregrine will notify customers of the intended changes by issuing a CNF (Customer Notification Form).
The information in this datasheet is believed to be reliable. However, Peregrine assumes no liability for the use of this information. Use shall be entirely at the user's own risk.

No patent rights or licenses to any circuits described in this datasheet are implied or granted to any third party. Peregrine's products are not designed or intended for use in devices or systems intended for surgical implant, or in other applications intended to support or sustain life, or in any application in which the failure of the Peregrine product could create a situation in which personal injury or death might occur. Peregrine assumes no liability for damages, including consequential or incidental damages, arising out of the use of its products in such applications.
The Peregrine name, logo, and UTSi are registered trademarks and UltraCMOS, HaRP, MultiSwitch and DuNE are trademarks of Peregrine Semiconductor Corp.

©2006-2012 Peregrine Semiconductor Corp. All rights reserved.