ANALOG DEVICES

Hittite MICROWAVE PRODUCTS FROM ANALOG DEVICES

Analog Devices Welcomes Hittite Microwave Corporation

Preliminary

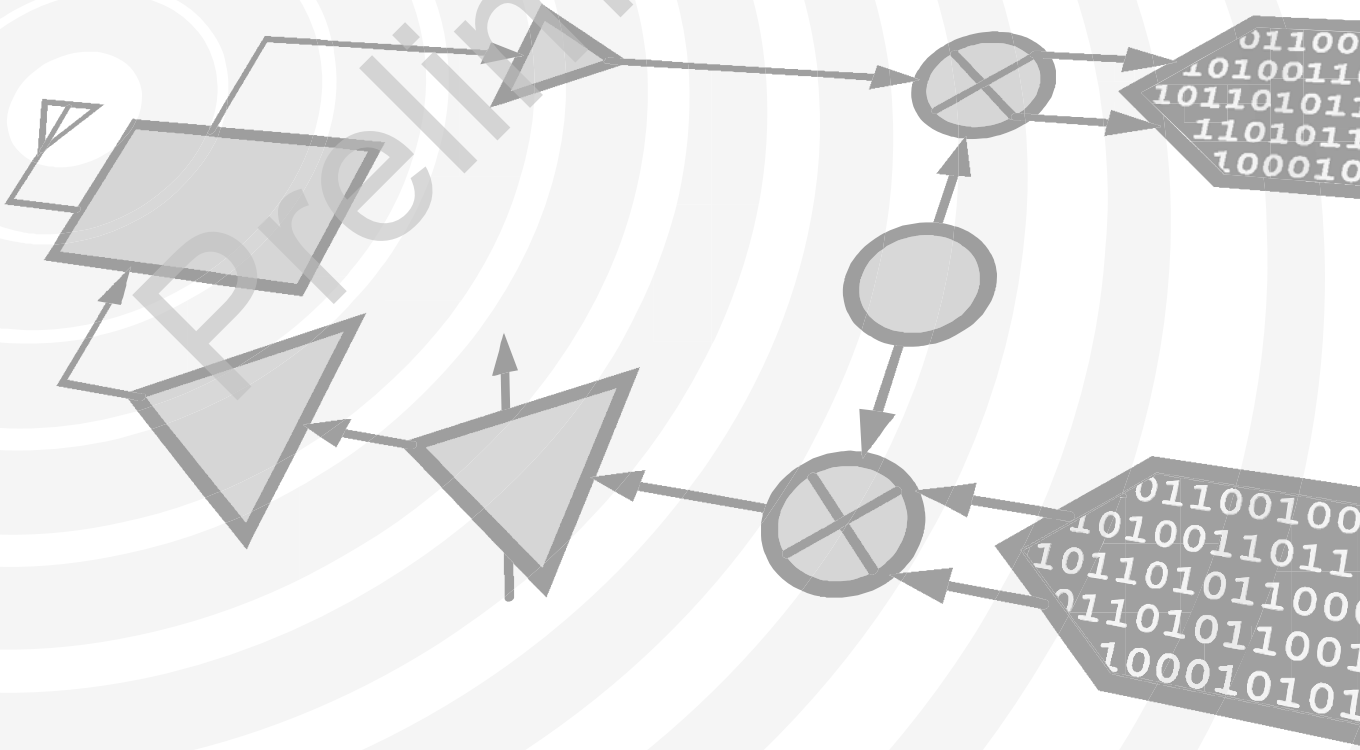

www.analog.com

www.hittite.com

THIS PAGE INTENTIONALLY LEFT BLANK

Preliminary

HMC425ALP3 / 425ALP3E

v00.1115

0.5 dB LSB GaAs MMIC 6-BIT DIGITAL POSITIVE CONTROL ATTENUATOR, 2.2 - 8.0 GHz

Typical Applications

The HMC425ALP3 / HMC425ALP3E is ideal for:

- WLAN & Point-to-Multi-Point
- Fiber Optics & Broadband Telecom
- Microwave Radio & VSAT
- Military

Features

0.5 dB LSB Steps to 31.5 dB

Single Control Line Per Bit

± 0.5 dB Typical Bit Error

Single +5V Supply

3x3 mm SMT Package

Functional Diagram

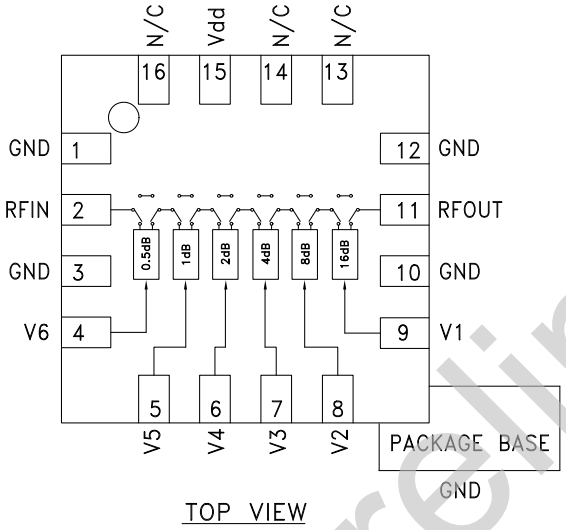

TOP VIEW

General Description

The HMC425ALP3 & HMC425ALP3E are broadband 6-bit GaAs IC digital attenuators in low cost leadless surface mount packages. Covering 2.2 to 8.0 GHz, the insertion loss is less then 3.8 dB typical. The attenuator bit values are 0.5 (LSB), 1, 2, 4, 8, and 16 dB for a total attenuation of 31.5 dB. Attenuation accuracy is excellent at ±0.5 dB typical step error with an IIP3 of +40 dBm. Six control voltage inputs, toggled between 0 and +3 to +5V, are used to select each attenuation state. A single Vdd bias of +3 to +5V is required.

Preliminary

Electrical Specifications, T_A = +25° C, With Vdd = +5V & Vctl = 0/+5V (Unless Otherwise Noted)

Parameter		Frequency (GHz)	Min.	Typ.	Max.	Units
Insertion Loss		2.2 - 6.0 GHz 6.0 - 8.0 GHz		3.5 3.8	3.8 4.3	dB dB
Attenuation Range		2.2 - 8.0 GHz		31.5		dB
Return Loss (RF1 & RF2, All Atten. States)		2.2 - 8.0 GHz		15		dB
Attenuation Accuracy: (Referenced to Insertion Loss)	All States	2.2 - 8.0 GHz	± 0.5 + 5% of Atten. Setting Max.			dB
Input Power for 0.1 dB Compression	Vdd = 5V Vdd = 3V	2.2 - 8.0 GHz		22 19		dBm dBm
Input Third Order Intercept Point (Two-Tone Input Power= 0 dBm Each Tone)	REF - 16.0 dB States 16.5 - 31.5 dB States	2.2 - 8.0 GHz		45 35		dBm dBm
Switching Characteristics tRISE, tFALL (10/90% RF) tON, tOFF (50% CTL to 10/90% RF)		2.2 - 8.0 GHz		 160 180		 ns ns

Information furnished by Analog Devices is believed to be accurate and reliable. However, no responsibility is assumed by Analog Devices for its use, nor for any infringements of patents or other rights of third parties that may result from its use. Specifications subject to change without notice. No license is granted by implication or otherwise under any patent or patent rights of Analog Devices. Trademarks and registered trademarks are the property of their respective owners.

For price, delivery, and to place orders: Analog Devices, Inc., One Technology Way, P.O. Box 9106, Norwood, MA 02062-9106
Phone: 781-329-4700 • Order online at www.analog.com
Application Support: Phone: 1-800-ANALOG-D

0.5 dB LSB GaAs MMIC 6-BIT DIGITAL POSITIVE CONTROL ATTENUATOR, 2.2 - 8.0 GHz

Absolute Maximum Ratings

Control Voltage (V1 to V6)	Vdd +0.5 Vdc
Bias Voltage (Vdd)	+7.0 Vdc
Staorage Temperature	-65 to +150 °C
Operating Temperature	-40 to +85 °C
RF Input Power (2.4 - 8.0 GHz)	+30 dBm
ESD Sensitivity (HBM)	Class 1A

ELECTROSTATIC SENSITIVE DEVICE
OBSERVE HANDLING PRECAUTIONS

Truth Table

Control Voltage Input						Attenuation State RF1 - RF2
V1 16 dB	V2 8 dB	V3 4 dB	V4 2 dB	V5 1 dB	V6 0.5 dB	
High	High	High	High	High	High	Reference I.L.
High	High	High	High	High	Low	0.5 dB
High	High	High	High	Low	High	1 dB
High	High	High	Low	High	High	2 dB
High	High	Low	High	High	High	4 dB
High	Low	High	High	High	High	8 dB
Low	High	High	High	High	High	16 dB
Low	Low	Low	Low	Low	Low	31.5 dB
Any combination of the above states will provide an attenuation approximately equal to the sum of the bits selected.						

Preliminary

Outline Drawing

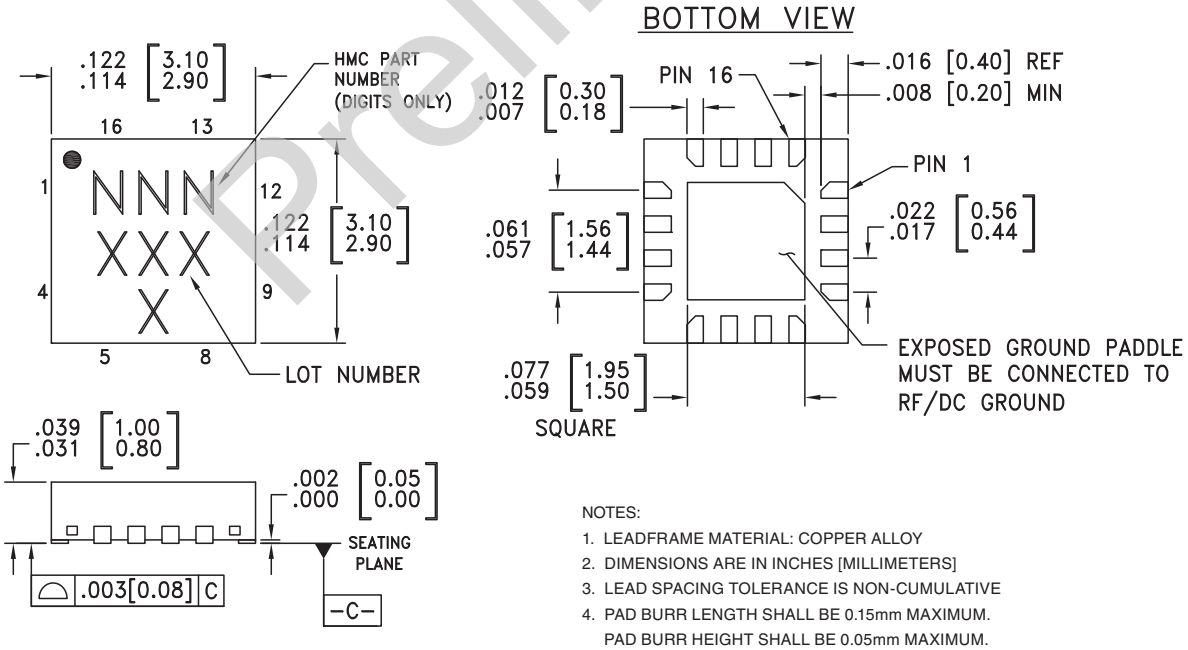

NOTES:

1. LEADFRAME MATERIAL: COPPER ALLOY
2. DIMENSIONS ARE IN INCHES [MILLIMETERS]
3. LEAD SPACING TOLERANCE IS NON-CUMULATIVE
4. PAD BURR LENGTH SHALL BE 0.15mm MAXIMUM. PAD BURR HEIGHT SHALL BE 0.05mm MAXIMUM.
5. PACKAGE WARP SHALL NOT EXCEED 0.05mm.
6. ALL GROUND LEADS AND GROUND PADDLE MUST BE SOLDERED TO PCB RF GROUND.
7. REFER TO HITTITE APPLICATION NOTE FOR SUGGESTED LAND PATTERN.