Clinching Tool 91117–1

PROPER USE GUIDELINES

Cumulative Trauma Disorders can result from the prolonged use of manually powered hand tools. Hand tools are intended for occasional use and low volume applications. A wide selection of powered application equipment for extended–use, production operations is available.

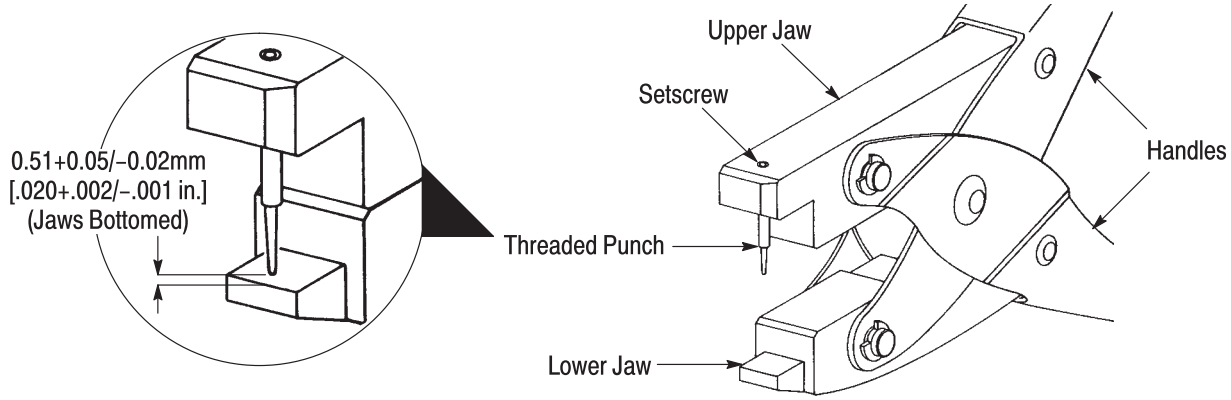

Figure 1

1. INTRODUCTION

Clinching Tool 91117–1 is designed to install external keys and key rivets onto a 2–row box connector to provide polarization of mating connectors.

NOTE

Dimensions in this instruction sheet are in millimeters [with inches in brackets]. Figures are not drawn to scale.

Reasons for reissue of this instruction sheet are provided in Section 6, REVISION SUMMARY.

2. DESCRIPTION (Figure 1)

The clinching tool consists of a handle, upper jaw and lower jaw. The upper jaw contains a setscrew and a replaceable threaded punch which clinches the rivet through the connector and key. The lower tool jaw supports the rivet when the tool handles are closed.

3. CLINCHING PROCEDURE

Before starting, make certain the connector, external key, and key rivet are compatible (see Figure 2).

NOTE

Close the tool handles and measure the distance between the punch tip and lower jaw. If necessary, adjust the threaded punch and setscrew to obtain the clearance shown in Figure 1. To adjust the punch, loosen the setscrew, adjust threaded punch up or down as required, and tighten setscrew.

Refer to Figure 2 and proceed as follows:

1. Determine keying position required on the connector. Key cavities are letter–coded on one

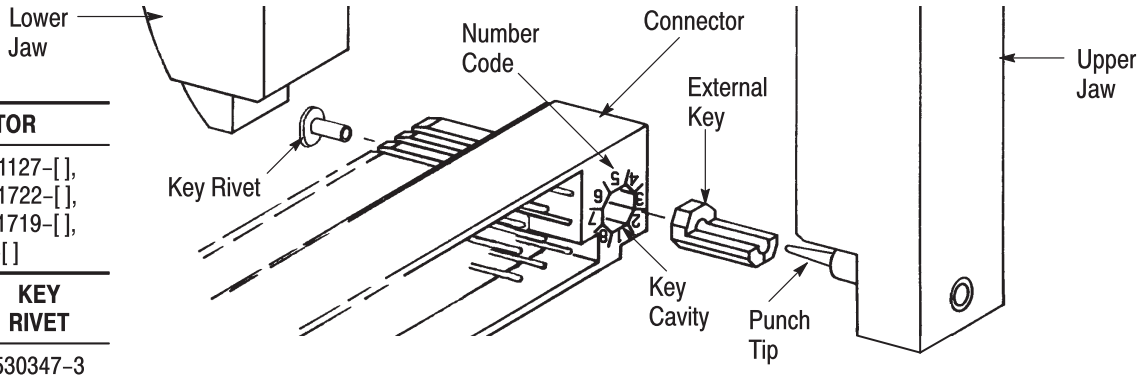

CONNECTOR	
530942–[ ], 531127–[ ], 531720–[ ], 531722–[ ], 531124–[ ], 531719–[ ], 531721–[ ]	
EXTERNAL KEY	**KEY RIVET**
530341–1	530347–3

Figure 2

©2009 Tyco Electronics Corporation, Harrisburg, PA
All International Rights Reserved
TE logo and Tyco Electronics are trademarks.
*Trademark. Other products, logos, and company names used are the property of their respective owners.

TOOLING ASSISTANCE CENTER 1–800–722–1111
PRODUCT INFORMATION 1–800–522–6752

This controlled document is subject to change.
For latest revision and Regional Customer Service, visit our website at **www.tycoelectronics.com**

end of the connector and number–coded on the other end.

2. Place the key into the cavity at the desired position. Insert the rivet into the back of the cavity with the flat edge against the connector.

3. Open the tool handles, and position the tool perpendicular to the connector.

4. Place the lower jaw on the rivet, and close the tool punch tip through the key and into the rivet.

5. Squeeze the tool handles together until the jaws are bottomed. Remove the tool and, if required, repeat these procedures on the other end of the connector.

4. MAINTENANCE AND INSPECTION

4.1. Daily Maintenance

Remove all foreign particles with a clean, soft brush or a clean, soft, lint–free cloth. Make sure the proper retaining pins are in place and are secured with the proper retaining rings.

Make sure all pivot points and bearing surfaces are protected with a thin coat of any good SAE 20 motor oil. DO NOT oil excessively.

4.2. Periodic Inspection

It is recommended that the tool be inspected upon arrival at your facility, and at regularly scheduled intervals, to ensure that the tool has not been damaged during handling.

Though recommendations call for at least one inspection a month, the inspection frequency should be based on the amount of use, ambient working conditions, operator training and skill, and established company standards.

5. REPLACEMENT AND REPAIR

Customer–replaceable parts are listed in Figure 3. Order replacement parts through your representative, or call 1–800–526–5142, or send a facsimile of your purchase order to 717–986–7605, or write to:

CUSTOMER SERVICE (038–035)
TYCO ELECTRONICS CORPORATION
PO BOX 3608
HARRISBURG PA 17105–3608

For customer repair service, call 1–800–526–5136.

6. REVISION SUMMARY

Revisions to this instruction sheet include:

- Updated document to corporate requirements
- Removed obsolete connector part number

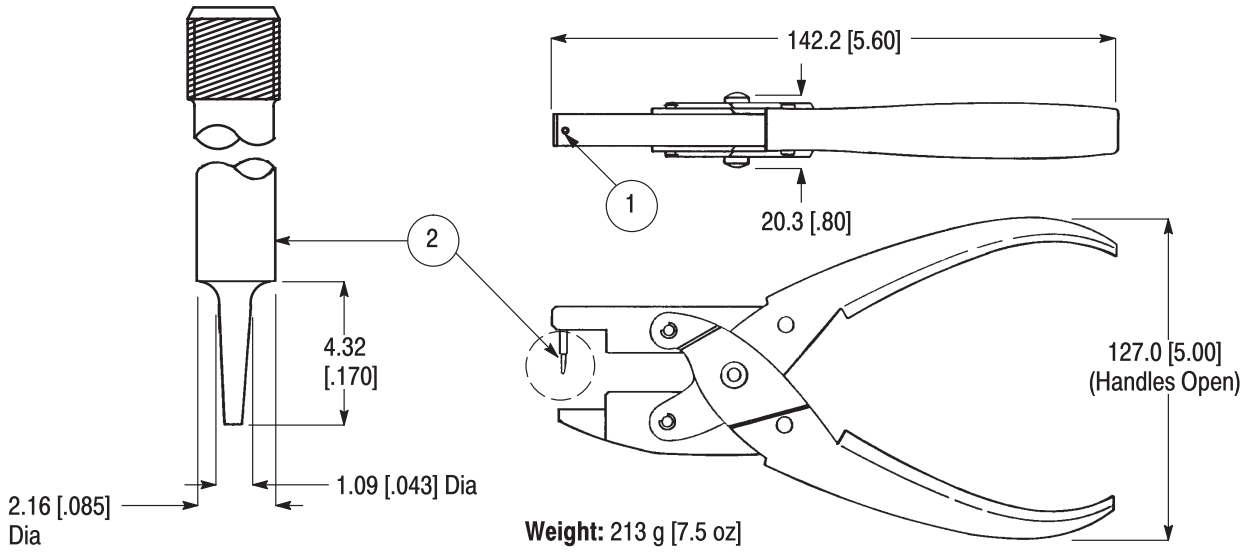

REPLACEMENT PARTS

ITEM	PART NUMBER	DESCRIPTION	QUANTITY PER TOOL
1	2–21006–7	SETSCREW, Socket Head, No. 6–32	1
2	126513–1	PUNCH, Threaded	1

Figure 3