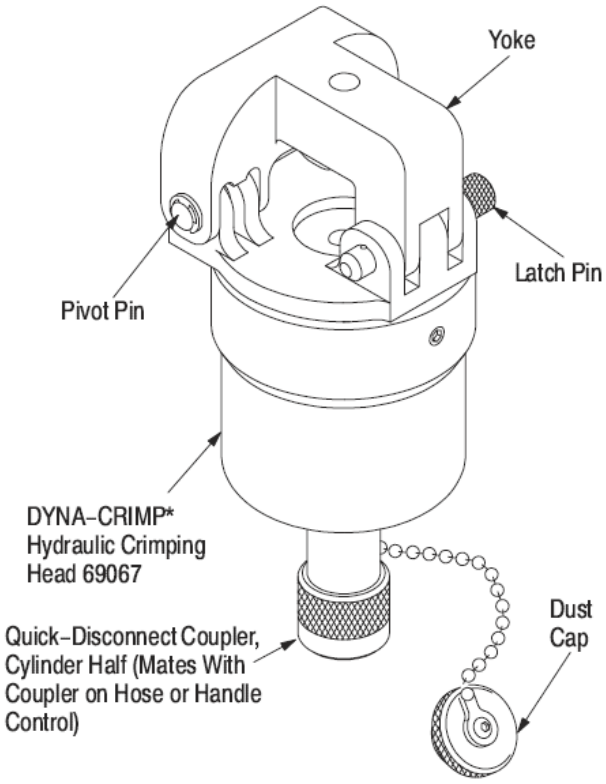

Figure 1

1. INTRODUCTION

This instruction sheet covers application, inspection and maintenance procedures for DYNA-CRIMP Crimping Head 69067 shown in Figure 1. The crimping head is used to crimp SOLISTRAND* terminals, flag terminals, and splices onto wire sizes 8 thru 4/0 AWG. See Instruction Sheet 408-9785.

Note: This instruction sheet provides general information for the insertion of dies and the crimping procedure. Always refer to the instructions packaged with specific die sets for specific crimping instructions.

This crimping head is designed for two DYNA-CRIMP tools: either Hydraulic Hand Pump 314979-1 described in Customer Manual 409-5860; or Hydraulic Power Unit 69120-[ ] described in Customer Manual 409-1950.

Warning: To avoid personal injury and potential damage to the crimp head, TE Connectivity (TE) requires the crimp head to operate at 8,000 to 8,400 PSI [552 to 579 bar]. TE recommends using 8,200 PSI [565 bar] TE Hydraulic Pumps as other manufacturers' pumps may apply insufficient pressure (resulting in an inadequate crimp) or excessive pressure (resulting in failure of the head). Additionally, the TE pump must be used to maintain CE certification; if using other manufacturers' pumps, the user is responsible for self-certification. Read these instructions and other applicable references carefully before proceeding.

NOTE
Dimensions in this instruction sheet are in millimeters [with inches in brackets]. Illustrations and figures are for reference only and are not drawn to scale.

Reasons for reissue of this Instruction Sheet are provided in Section 8; REVISION SUMMARY

© 2017 TE Connectivity Ltd. family of companies.
All Rights Reserved.
*Trademark

TE Connectivity, TE connectivity (logo), and TE (logo) are trademarks. Other logos, product, and/or company names may be trademarks of their respective owners.

2. DESCRIPTION

Main components of the crimping head are: a yoke which houses the stationary die and retains the terminal assembly for crimping, a removable latch pin which allows pivoting of the yoke on the pivot pin (typically required for splice terminations), a cylinder which contains the head's hydraulic chamber, a piston (ram) which holds and controls the moving die, and a quick connect/disconnect coupler (cylinder half) which mates with the coupler on hose or handle control to release or supply pressure.

DANGER

To avoid injury when using DYNA-CRIMP equipment, observe the following precautions:

- *DO NOT modify the crimping equipment in any way.*
- *USE ONLY dies, terminals, and wire specified for the head.*
- *DO NOT perform repairs other than those specified in the instructional material supplied with the equipment.*

3. CRIMPING HEAD INSTALLATION

Each crimping head is shipped with a coating of lubricating oil to prevent rust and corrosion. Wipe the oil off before installing the crimping head on the power unit. Note that the crimping head is shipped without oil inside the cylinder. To install crimping head, proceed as follows:

DANGER

Verify that the hydraulic pressure to hose or handle control is released and that power supply is disconnected from electric power unit, if applicable.

1. Thoroughly clean coupling area of handle control or hose assembly and crimping head (see Figure 1).
2. Remove protective dust caps from both quick connect/disconnect couplers.
3. Hold hose or handle control in vertical position to prevent oil spillage. Attach hose or handle control to coupling section on head. THREAD PROPERLY AND TIGHTEN SECURELY.

CAUTION

Oil flow must be unobstructed between power unit and crimping head. Verify that all couplers are fully mated and tightened.

NOTE

If crimping head must be removed after being in production, pressure must be released in the hydraulic system before head is removed.

- *If using Hydraulic Power Unit 69120-[ ], disconnect power unit from power supply.*
- *If using Hydraulic Hand Pump 314979-1, depress pressure release lever.*

4. DIE INSERTION AND REMOVAL (FIGURE 2)

DANGER

Use extreme care when operating power unit. DO NOT inadvertently actuate the tool when installing or changing dies. Personal injury could result.

4.1. Die Insertion

1. Remove latch pin and open yoke on crimping head.
2. Insert stationary die (upper) into yoke by pushing die until it snaps into position.
3. Activate power unit to advance ram slightly as shown in Figure 2.
4. Insert moving (lower) die, which serves as the indenter, into ram well, making sure that moving die is properly oriented to mate with stationary die.
5. Close yoke and secure with latch pin.
6. Slowly close dies to ensure proper alignment.
7. Complete the cycle and return the ram to the "DOWN" position.

CAUTION

Ensure latch pin is fully inserted or damage may occur to the yoke, dies, or latch pin.

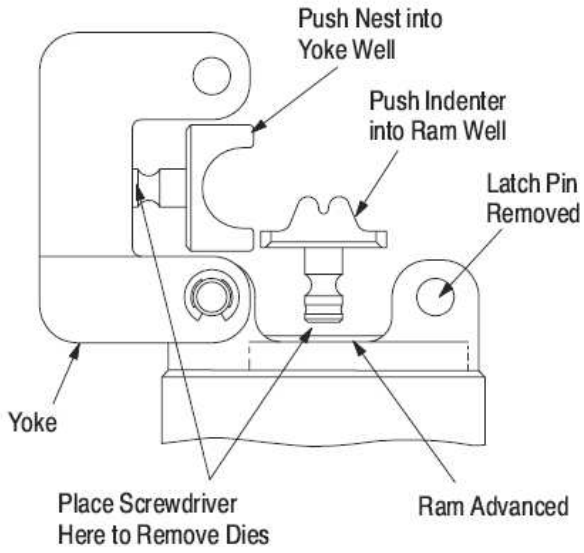

Figure 2

4.2. Die Removal

1. Remove latch pin and open yoke.
2. Insert screwdriver under stationary die and pry die out of yoke (see Figure 2).
3. Raise ram to full “UP” position.
4. Insert screwdriver under moving die and pry die out of ram.

NOTE
Latch Pin Kit 69709-4 is available as an accessory item. The latch pin is attached to the pivot pin by a chain to avoid misplacing the latch pin.

5. CRIMPING PROCEDURE

The following crimping procedure provides general information. Refer to instructions packaged with individual die sets for specific products, wire sizes, strip dimensions, positioning of terminals and splices in the dies, and crimping procedures.

DANGER
To prevent personal injury when operating the power unit, exercise caution while holding terminals, splices or wire near crimping area.

CAUTION
Never operate the power unit without having a crimping head attached to the handle control or crimping head coupling.

1. Insert terminal or splice in the stationary (upper) die in accordance with instructions packaged with the dies. Verify the latch pin is secure before activating the power unit.
2. Slowly advance moving (lower) die with short, quick strokes until terminal or splice is secure.
3. Insert the stripped wire.
4. Cycle tool to complete crimp. Remove crimped terminal or splice.

NOTE
If the splice or terminal sticks in the die after crimping, apply a rocking action to release it.

6. INSPECTION AND MAINTENANCE

DANGER
Verify hydraulic pressure is released and power supply is disconnected before following maintenance and inspection procedures, unless otherwise specified in the procedure.

Each crimping head is assembled and inspected before shipment. TE Connectivity recommends that the crimping head be inspected immediately upon its arrival at the facility of use, and at regularly scheduled intervals, to ensure the head has not been damaged during handling and use. Frequency of inspection depends upon the following: care, amount of use, and handling of the head; type and size of products crimped; degree of operator skill; and environmental conditions.

6.1. Cleaning

Remove accumulations of dirt and grease on the crimping head; especially in areas where dies are installed and terminals are crimped. Clean the entire head frequently with a clean, lint-free cloth.

6.2. Visual Inspection

Refer to Figure 3 and proceed as follows:

1. With hydraulic pressure released, inspect the assembled head for nicks, scratches, and cracks. Inspect for cracks especially at the corners of the yoke and around the top of the cylinder.

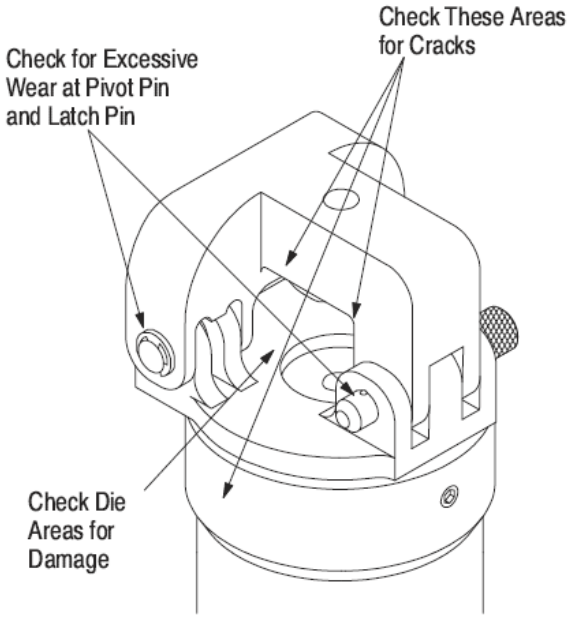

Figure 3

2. Inspect pivot pin holes and latch pin holes for wear. Replace parts, as needed.
3. Activate power unit. Raise ram to “UP” position. Inspect flat and round surfaces of ram for galling (fretting or wear by friction), cracks, or oil leakage. Release pressure and make sure that ram retracts smoothly.
4. If head shows evidence of galling, cracks, oil leakage, or rough cycling, return the crimping head to TE for repairs. Refer to Section 7, REPLACEMENT PARTS AND REPAIR.

NOTE
Once per year, or every 7,500 cycles (whichever comes first), the hydraulic head should be returned to TE for magnetic particle inspection. Additionally, inspect and service the head (as described in Figure 4) every month or 1,000 cycles. Refer to Instruction Sheet 408-9684.

6.3. Crimping Head Check-Out Procedure

If the ram fails to return to the "DOWN" position after completion of a crimping cycle, the cause may be in the crimping head. To determine whether the trouble is in the crimping head or not, release pressure in the power unit.

If the ram retracts, the trouble is not in the crimping head.

If ram does NOT retract, refer to paragraph 6.4.

6.4. Crimping Head Disassembly Procedure [Figure 4]

DANGER
Verify that the hydraulic pressure to hose or handle control is released and that power supply is disconnected from electric power unit, if applicable.

NOTE
Numbers in parentheses refer to Item Numbers in Figure 4.

1. Remove crimping head from handle control or coupling and place in a vise.

   Use a suitable material to protect the finish on the head.
2. Remove the setscrew (Item 2) that secures the head assembly to the cylinder.
3. Turn the head assembly counterclockwise to remove it from the cylinder.
4. Remove the ram assembly (piston) and ram return spring. Inspect for broken or weak ram return spring and deteriorated or torn piston "O" ring, and back-up ring.
5. Apply a thin film of hydraulic fluid (same type used in power unit reservoir) on the surface of the "O" ring and back-up ring.
6. Install the ram assembly and ram return spring in the cylinder.
7. Align the key on ram assembly with the keyway in head and install the head into cylinder. Tighten by hand.
8. Install setscrew (Item 2). **Be sure set screw is installed through the cylinder and bottoms on the groove of the cylinder**.
9. Attach crimping head to handle control or coupling (refer to Section 3).

7. REPLACEMENT PARTS AND REPAIR

Customer-replaceable parts are listed in Figure 4. A complete inventory should be stocked and controlled to prevent lost time when replacement of parts is necessary. Order parts through your TE Representative or call 1-800-526-5142, or send a facsimile of your purchase order to 1-717-986-7605, or write, or return the entire tool for evaluation and repair, with a written description of the problem to:

CUSTOMER SERVICE (38-35)
TE CONNECTIVITY CORPORATION
P.O. BOX 3608
HARRISBURG, PA 17105-3608

Tools may also be returned for evaluation and repair. For tool repair service, contact a TE Representative at 1-800-526-5136.

8. REVISION SUMMARY

- Added Warning (paragraph 1)
- Added NOTE after paragraph 6.2.4. specifying return to TE for magnetic particle inspection
- Added Crimping Head Disassembly Procedure (paragraph 6.4.) and reference to it in paragraph 6.3.
- Renumbered items in figure 4 and added text of component names

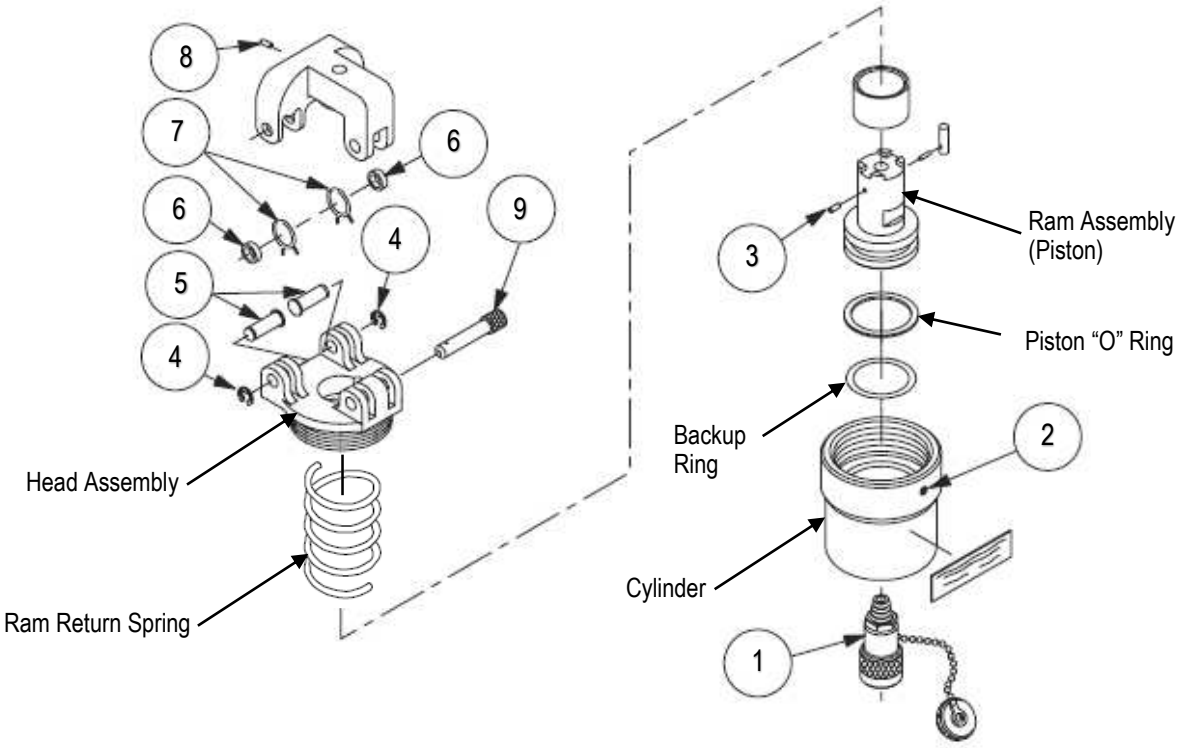

Item Number	Part Number	Description	Quantity Per Head
1	311471-1	Coupler, Quick-Disconnect, Cylinder Half	1
2	1-22667-4	Screw, Socket Set Self-Locking ¼-20 UNC x .250 in. Long	1
3	23057-4	Ball Plunger	1
4	21045-9	Ring, Retaining	2
5	301516	Pin, Pivot	2
6	301555	Spacer	2
7	301556	Spring	2
8	23057-6	Ball Plunger	1
9	306209-2	Pin, Latch	1

Figure 4