molex
one company > a world of innovation

This document was generated on 03/26/2010

PLEASE CHECK WWW.MOLEX.COM FOR LATEST PART INFORMATION

Part Number: 0082285520

Status: Active

Description: 1.27mm (.050") Pitch Round Conductor Flat Cable - 28 AWG (7 x 36) Stranded Topcoat, 20 Circuits, Reel 30.48m (100.0') Length

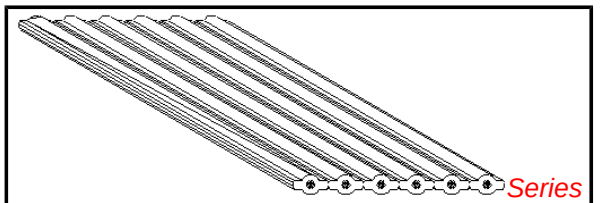

image - Reference only

Documents:
Drawing (PDF)
RoHS Certificate of Compliance (PDF)

Agency Certification

CSA	LR61126
UL	E61522

General

Product Family	Cable
Series	40158
Crimp Quality Equipment	Yes
Geographic Area	Asia
Product Name	Ribbon

Physical

Cable Length	30.48m (100.0')
Circuits (Loaded)	20
Insulation	PVC
Packaging Type	Reel
Pitch - Term. Interface (in)	0.050 In
Pitch - Term. Interface (mm)	1.27 mm
Temperature Range - Operating	-20°C to +105°C
Wire Size AWG	28
Wire/Cable Type	(7x36) Stranded, Topcoat

Electrical

Current - Maximum per Contact	N/A
Voltage - Maximum	300V

Material Info

Old Part Number	40158-20-100B

Reference - Drawing Numbers

Sales Drawing	SD-40158-001

EU RoHS
ELV and RoHS Compliant
REACH SVHC
Not Reviewed
Halogen-Free Status
Not Reviewed

China RoHS

Need more information on product environmental compliance?

Email productcompliance@molex.com
For a multiple part number RoHS Certificate of Compliance, click here

Please visit the Contact Us section for any non-product compliance questions.

Search Parts in this Series
40158Series

Use With
70121 MX-50™ Slimline Ribbon Cable.
90584 Picoflex® PF-50 IDT Receptacle

This document was generated on 03/26/2010

PLEASE CHECK WWW.MOLEX.COM FOR LATEST PART INFORMATION

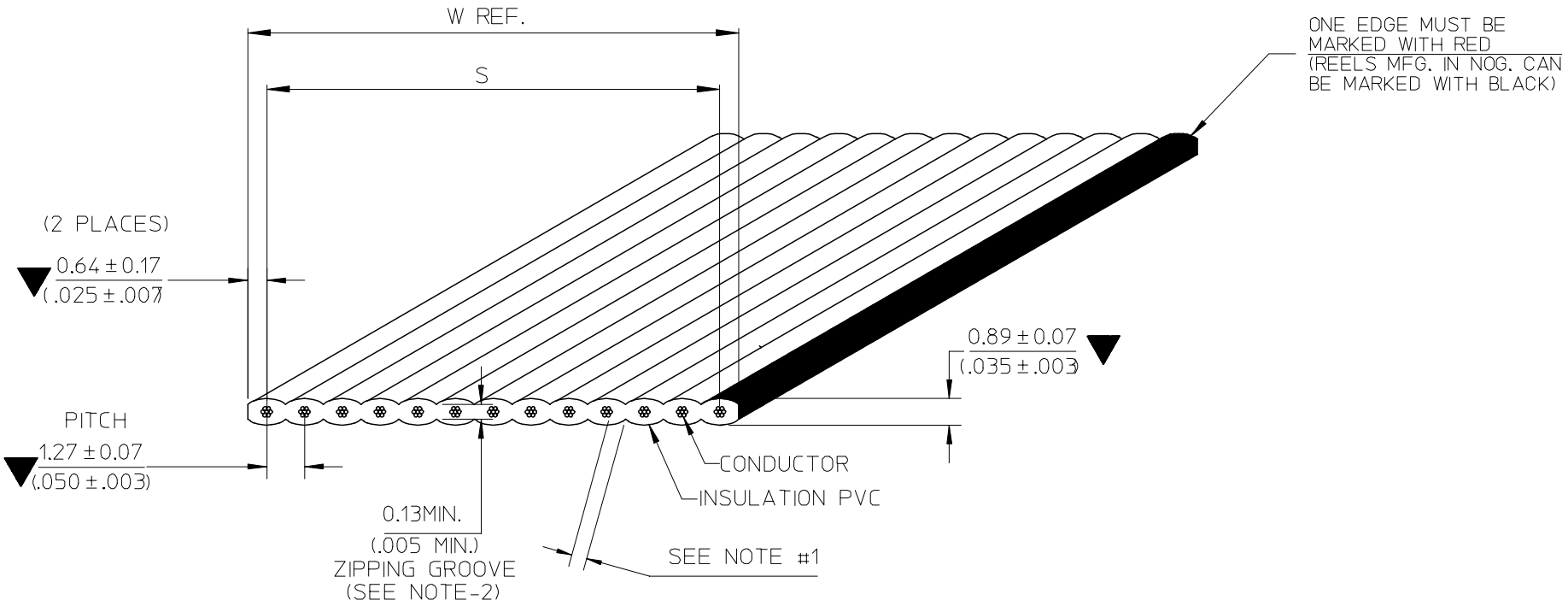

NOTE :
1. THE CABLE SHALL HAVE A MINIMUM OF 0.178mm. (.007") THICKNESS INSULATION AT ANY POINT
2. RIP TEST:
   - THE 0.13mm. (.005") ZIPPING GROOVE SHALL BE CAPABLE OF BEING RIPPED BY HAND WITHIN THE RECESS,WITHOUT EXPOSING THE ADJACENT CONDUCTORS
3. RoHS AND LEAD FREE COMPLIANT
4. SPECIAL REQUIREMENT: N/A

REV. HISTORY	EC NO.	DETAIL	DATE
B	E-07-0748	B_2: ADD NON-OPERATING TEMP. B_1: ADD SOLDERING CONDITION	07/10/02
A	N/A	NEW RELEASE	06/07/12

SEE CHANGE DETAIL
EC NO: THL2008-0015
DRWN:CPANSAKHOM 2007/11/28
CH'KD:DNARINTARA 2007/11/29
APPR:SVIRATJAPOL 2007/12/04
DESCRIPTION
B
REV

QUALITY SYMBOLS
▼=3
▽=0

GENERAL TOLERANCES (UNLESS SPECIFIED)

	mm	INCH
4 PLACES	± ---	± ---
3 PLACES	± ---	± ---
2 PLACES	± ---	± ---
1 PLACE	± ---	± ---
ANGULAR ±---°		

DRAFT WHERE APPLICABLE MUST REMAIN WITHIN DIMENSIONS

DIMENSION STYLE: MM/IN
SCALE: NTS
DESIGN UNITS: INCH
THIRD ANGLE PROJECTION

DRAWN BY: CPANSAKHOM DATE: 2006/07/12
CHECKED BY: PMEECHAI DATE: 2006/07/12
APPROVED BY: SVIRATJAPOL DATE: 2006/07/12

TITLE: FCB ROUND CONDUCTOR 1.27MM(.050)CENTERS PVC. 28AWG STR TOPCOATED

MOLEX INCORPORATED

MATERIAL NO.: SEE CHART
DOCUMENT NO.: SD-40158-001
SHEET NO.: 1 OF 3
SIZE: A4

THIS DRAWING CONTAINS INFORMATION THAT IS PROPRIETARY TO MOLEX INCORPORATED AND SHOULD NOT BE USED WITHOUT WRITTEN PERMISSION

SPECIFICATIONS

PHYSICAL

CONDUCTOR SPACING	1.27 (.050") ℄ TO ℄
WIRE GAUGE	28 AWG(7/36) AWG, STRANDED TOPCOATED
INSULATION	P.V.C GRAY (LEAD FREE)

AGENCY

U.L. STYLE NO.	2651
TEMPERATURE RATING	-20°C TO 105°C
VOLTAGE RATING	300V.MAX.
FLAMMABILITY RATING	VW-1

ELECTRICAL

CONDUCTOR RESISTANCE (D.C.)	68 m OHMS/FT. MAX.
CHARACTERISTIC IMPEDANCE	123 OHMS NOM. (GS) 100 OHMS NOM. (GSG)
CAPACITANCE	9.1 pF/FT. NOM. (GS) 17.0 pF/FT. NOM. (GSG)
PROPAGATION DELAY	1.4 ns/FT. NOM.
INSULATION RESISTANCE	10M OHMS (10FT. SAMPLE)
DIELECTRIC WITHSTAND VOLTAGE	2000 VRMS/MINUTE

GENERAL

B_2 NON-OPERATING TEMPERATURE	-20°C TO 105°C
FAULTS AND/OR SPLICES	1/REEL MAX. 100 $^{+3}_{-0}$FT. (30.48 $^{+0.914}_{-0}$M.)/REEL 20FT. (6.096M.) MIN. LENGTH

B_1 SOLDERING CONDITION

SOLDER TEMPERATURE	260°C. MAX.
SOLDERING TIME	3 SECOND, MAX.
INSULATION SHRINK	2MM. NOM

SEE CHANGE DETAIL
EC NO: THL2008-0015
DR'WN:CPANSAKHOM 2007/11/28
CH'KD:DNARINTARA 2007/11/29
APPR:SVIRATJAPOL 2007/12/04
DESCRIPTION
B
REV

QUALITY SYMBOLS
▼ =
Ⓒ =

GENERAL TOLERANCES (UNLESS SPECIFIED)

	mm	INCH
4 PLACES	± ---	± ---
3 PLACES	± ---	± ---
2 PLACES	± ---	± ---
1 PLACE	± ---	± ---
ANGULAR ±---°		

DRAFT WHERE APPLICABLE MUST REMAIN WITHIN DIMENSIONS

DIMENSION STYLE	MM/IN
SCALE	NTS
DESIGN UNITS	INCH
	THIRD ANGLE PROJECTION
DRAWN BY / DATE	CPANSAKHOM 2006/07/12
CHECKED BY / DATE	PMEECHAI 2006/07/12
APPROVED BY / DATE	SVIRATJAPOL 2006/07/12
MATERIAL NO.	SEE CHART
TITLE	FCB ROUND CONDUCTOR 1.27MM(.050)CENTERS PVC. 28AWG STR TOPCOATED
	MOLEX INCORPORATED
DOCUMENT NO.	SD-40158-001
SHEET NO.	2 OF 3
SIZE	A4

THIS DRAWING CONTAINS INFORMATION THAT IS PROPRIETARY TO MOLEX INCORPORATED AND SHOULD NOT BE USED WITHOUT WRITTEN PERMISSION

ENGINEERING NO.

40158-XX-XXXX
A B C D

A : CABLE 1.27mm. (.050") CENTERS 28AWG STRANDED TOPCOATED
B : CONDUCTOR SIZE (AVAILABILITY 3 THROUGH 50)
C : CABLE LENGTH 100FT. (30.48M.)
D : A = INCHES
B = FEET

CHART A
DIMENSIONS MM (INCHES)

ENG. NO.	NO.OF COND.	DIMENSION S	DIM. W (REF)	SHIPPED ON 100FT. REELS	
				ENGINEERING NO.	ORDER NO.
40158- 3	3	2.54±0.18 (.100±.007)	3.81 (.150)	40158-03-100B	82-28-5503
40158- 4	4	3.81±0.18 (.150±.007)	5.08 (.200)	40158-04-100B	82-28-5504
40158- 5	5	5.08±0.18 (.200±.007)	6.35 (.250)	40158-05-100B	82-28-5505
40158- 6	6	6.35±0.18 (.250±.007)	7.62 (.300)	40158-06-100B	82-28-5506
40158- 7	7	7.62±0.18 (.300±.007)	8.89 (.350)	40158-07-100B	82-28-5507
40158- 8	8	8.89±0.18 (.350±.007)	10.16 (.400)	40158-08-100B	82-28-5508
40158- 9	9	10.16±0.18 (.400±.007)	11.43 (.450)	40158-09-100B	82-28-5509
40158-10	10	11.43±0.18 (.450±.007)	12.70 (.500)	40158-10-100B	82-28-5510
40158-11	11	12.70±0.18 (.500±.007)	13.97 (.550)	40158-11-100B	82-28-5511
40158-12	12	13.97±0.18 (.550±.007)	15.24 (.600)	40158-12-100B	82-28-5512
40158-13	13	15.24±0.18 (.600±.007)	16.51 (.650)	40158-13-100B	82-28-5513
40158-14	14	16.51±0.18 (.650±.007)	17.78 (.700)	40158-14-100B	82-28-5514
40158-15	15	17.78±0.18 (.700±.007)	19.05 (.750)	40158-15-100B	82-28-5515
40158-16	16	19.05±0.23 (.750±.009)	20.32 (.800)	40158-16-100B	82-28-5516
40158-17	17	20.32±0.23 (.800±.009)	21.59 (.850)	40158-17-100B	82-28-5517
40158-18	18	21.59±0.23 (.850±.009)	22.86 (.900)	40158-18-100B	82-28-5518
40158-19	19	22.86±0.23 (.900±.009)	24.13 (.950)	40158-19-100B	82-28-5519
40158-20	20	24.13±0.23 (.950±.009)	25.40 (1.000)	40158-20-100B	82-28-5520
40158-21	21	25.40±0.23 (1.000±.009)	26.67 (1.050)	40158-21-100B	82-28-5521
40158-22	22	26.67±0.23 (1.050±.009)	27.94 (1.100)	40158-22-100B	82-28-5522
40158-23	23	27.94±0.23 (1.100±.009)	29.21 (1.150)	40158-23-100B	82-28-5523
40158-24	24	29.21±0.23 (1.150±.009)	30.48 (1.200)	40158-24-100B	82-28-5524
40158-25	25	30.48±0.23 (1.200±.009)	31.75 (1.250)	40158-25-100B	82-28-5525
40158-26	26	31.75±0.23 (1.250±.009)	33.02 (1.300)	40158-26-100B	82-28-5526
40158-27	27	33.02±0.23 (1.300±.009)	34.29 (1.350)	40158-27-100B	82-28-5527
40158-28	28	34.29±0.23 (1.350±.009)	35.56 (1.400)	40158-28-100B	82-28-5528
40158-29	29	35.56±0.23 (1.400±.009)	36.83 (1.450)	40158-29-100B	82-28-5529
40158-30	30	36.83±0.23 (1.450±.009)	38.10 (1.500)	40158-30-100B	82-28-5530
40158-31	31	38.10±0.23 (1.500±.009)	39.37 (1.550)	40158-31-100B	82-28-5531
40158-32	32	39.37±0.23 (1.550±.009)	40.64 (1.600)	40158-32-100B	82-28-5532
40158-33	33	40.64±0.23 (1.600±.009)	41.91 (1.650)	40158-33-100B	82-28-5533
40158-34	34	41.91±0.23 (1.650±.009)	43.18 (1.700)	40158-34-100B	82-28-5534
40158-35	35	43.18±0.23 (1.700±.009)	44.45 (1.750)	40158-35-100B	82-28-5535
40158-36	36	44.45±0.23 (1.750±.009)	45.72 (1.800)	40158-36-100B	82-28-5536
40158-37	37	45.72±0.28 (1.800±.011)	46.99 (1.850)	40158-37-100B	82-28-5537
40158-38	38	46.99±0.28 (1.850±.011)	48.26 (1.900)	40158-38-100B	82-28-5538
40158-39	39	48.26±0.28 (1.900±.011)	49.53 (1.950)	40158-39-100B	82-28-5539
40158-40	40	49.53±0.28 (1.950±.011)	50.80 (2.000)	40158-40-100B	82-28-5540
40158-41	41	50.80±0.28 (2.000±.011)	52.07 (2.050)	40158-41-100B	82-28-5541
40158-42	42	52.07±0.28 (2.050±.011)	53.34 (2.100)	40158-42-100B	82-28-5542
40158-43	43	53.34±0.28 (2.100±.011)	54.61 (2.150)	40158-43-100B	82-28-5543
40158-44	44	54.61±0.28 (2.150±.011)	55.88 (2.200)	40158-44-100B	82-28-5544
40158-45	45	55.88±0.28 (2.200±.011)	57.15 (2.250)	40158-45-100B	82-28-5545
40158-46	46	57.15±0.28 (2.250±.011)	58.42 (2.300)	40158-46-100B	82-28-5546
40158-47	47	58.42±0.28 (2.300±.011)	59.69 (2.350)	40158-47-100B	82-28-5547
40158-48	48	59.69±0.28 (2.350±.011)	60.96 (2.400)	40158-48-100B	82-28-5548
40158-49	49	60.96±0.28 (2.400±.011)	62.23 (2.450)	40158-49-100B	82-28-5549
40158-50	50	62.23±0.28 (2.450±.011)	63.50 (2.500)	40158-50-100B	82-28-5550

SCALE NTS
DESIGN UNITS INCH
THIRD ANGLE PROJECTION
TITLE
FCB ROUND CONDUCTOR
1.27MM(.050)CENTERS PVC.
28AWG STR TOPCOATED
molex MOLEX INCORPORATED
DOCUMENT NO. SD-40158-001
SHEET NO. 3 OF 3
SIZE A4
MATERIAL NO. SEE CHART
DIMENSION STYLE MM/IN
DRAWN BY CPANSAKHOM DATE 2006/07/12
CHECKED BY PMEECHAI DATE 2006/07/12
APPROVED BY SVIRATJAPOL DATE 2006/07/12

GENERAL TOLERANCES (UNLESS SPECIFIED)

	mm	INCH
4 PLACES	±.---	±.---
3 PLACES	±.---	±.---
2 PLACES	±.---	±.---
1 PLACE	±.---	±.---
ANGULAR	±.---°	

QUALITY SYMBOLS

DRAFT WHERE APPLICABLE MUST REMAIN WITHIN DIMENSIONS

THIS DRAWING CONTAINS INFORMATION THAT IS PROPRIETARY TO MOLEX INCORPORATED AND SHOULD NOT BE USED WITHOUT WRITTEN PERMISSION

SEE CHANGE DETAIL
EC NO: THL2008-0015

REV	DESCRIPTION
B	DRWN:CPANSAKHOM 2007/11/28 CH'KD:DNARINTARA 2007/11/29 APPR:SVIRATJAPOL 2007/12/04