DIESEL ENGINE-GENERATOR SET
400-XC6DT3

400 ekW / 60 Hz / Standby
340 ekW / 60 Hz / Prime
208 - 4160V

SYSTEM RATINGS

Standby

Voltage (L-L)	240V**	208V**	240V**	480V**	600V**	4160V
Phase	1	3	3	3	3	3
PF	1.0	0.8	0.8	0.8	0.8	0.8
Hz	60	60	60	60	60	60
kW	400	400	400	400	400	400
kVA	400	500	500	500	500	500
AMPS	1667	1388	1203	601	481	69
skVA@30%						
Voltage Dip	700	820	820	1100	1100	1100
Generator Model*	573RSL4035	433CSL6220	433CSL6220	433CSL6220	433PSL6248	573FSM4352
Temp Rise	130°C/27°C	130°C/27°C	130°C/27°C	130°C/27°C	125°C/40°C	130°C/27°C
Connection	12 LEAD ZIG-ZAG	12 LEAD LOW WYE	12 LEAD HI DELTA	12 LEAD HI WYE	4 LEAD WYE	6 LEAD WYE

Prime

Voltage (L-L)	240V	208V	240V	480V	600V	4160V
Phase	1	3	3	3	3	3
PF	1.0	0.8	0.8	0.8	0.8	0.8
Hz	60	60	60	60	60	60
kW	340	340	340	340	340	340
kVA	340	425	425	425	425	425
AMPS	1417	1180	1022	511	409	59
skVA@30%						
Voltage Dip	700	820	820	1100	1100	1100
Generator Model*	573RSL4035	433CSL6220	433CSL6220	433CSL6220	433PSL6248	573FSM4352
Temp Rise	105°C/40°C	105°C/40°C	105°C/40°C	105°C/40°C	105°C/40°C	105°C/40°C
Connection	12 LEAD ZIG-ZAG	12 LEAD LOW WYE	12 LEAD HI DELTA	12 LEAD HI WYE	4 LEAD WYE	6 LEAD WYE

* The Generator Model Number identified in the table is for standard C Series Configuration. Consult the factory for alternate configuration.
** UL2200 Offered

FACTS

// EPA Tier 3 Certified
// Engine-Generator Set Tested to ISO 8528-5 for Transient Response
// UL2200, CSA Listing Offered
// Accepts Rated Load in One Step Per NFPA 110, Level 1
// All engine-generator sets are prototype and factory tested
// MTU Onsite Energy is a single source supplier
// Global Product Support
// 2 Year Standard Warranty
// Custom Design for Any Application
// Series 60 (6063HV35) Diesel Engine
- 14.0 Liter Displacement
- Electronic Unit Pump Injection
- 4-Cycle

// Complete Range of Accessories
// Permanent Magnet Generator (PMG) - Optional
- Brushless, Rotating Field
- 300% Short Circuit Capability
- 2/3 Pitch Windings
// Digital Control Panel(s)
- UL Recognized, c UL us, NFPA 110
- Complete System Metering
- LCD Display
// Cooling System
- Integral Set-Mounted
- Engine Driven Fan

STANDARD EQUIPMENT

// Engine

Air Cleaners
Oil Pump
Full Flow Oil Filter
Jacket Water Pump
Thermostat
Exhaust Manifold – Dry
Blower Fan & Fan Drive
Radiator - Unit Mounted
Electric Starting Motor - 24V
Governor – Electric Isochronous
Base - Formed Steel
SAE Flywheel & Bell Housing
Charging Alternator - 24V
Battery Box & Cables
Flexible Fuel Connectors
Flexible Exhaust Connection
EPA Certified Engine

// Generator

NEMA MG1, IEEE and ANSI standards compliance for temperature rise and motor starting
Sustained short circuit current of up to 300% of the rated current for up to 10 seconds
Self-Ventilated and Drip-Proof
Superior Voltage Waveform
Digital, Solid State, Volts-per-Hertz Regulator
No Load to Full Load Regulation
Brushless Alternator with Brushless Pilot Exciter
4 Pole, Rotating Field
130°C Standby Temperature Rise
1 Bearing, Sealed
Flexible Coupling
Full Amortisseur Windings
125% Rotor Balancing
3-Phase Voltage Sensing
±1% Voltage Regulation
100% of Rated Load - One Step
3% Maximum Harmonic Content

// Digital Control Panel(s)

Digital Metering
Engine Parameters
Generator Protection Functions
Engine Protection
SAE J1939 Engine ECU Communications
Windows-Based Software
Multilingual Capability
Remote Communications to our RDP-110 Remote Annunciator
16 Programmable Contact Inputs
7 Contact Outputs
UL Recognized, c UL us, CE Approved
Event Recording
IP 54 Front Panel Rating with Integrated Gasket
NFPA110 Level Compatible

APPLICATION DATA

// Engine

Manufacturer	MTU Detroit Diesel
Model	Series 60 (6063HV35)
Type	4-Cycle
Arrangement	6-Inline
Displacement: Cu In (lit)	855 (14)
Bore: in (cm)	5.24 (13.3)
Stroke: in (cm)	6.61 (16.8)
Compression Ratio	16:1
Rated RPM	1,800
Engine Governor	DDEC
Max Power: Standby: bhp (kWm)	635 (473)
Max Power: Prime: bhp (kWm)	550 (410)
Regulation	±.25%
Frequency	60 Hz
Air Cleaner	Dry

// Liquid Capacity (Lubrication)

Total Oil System: gal (lit)	9.5 (36)
Engine Jacket Water Capacity: gal (lit)	6 (23)
System Coolant Capacity: gal (lit)	42 (159)

// Electrical

Electric Volts DC	24
Cold Cranking Amps Under 0°F (-17.8°C)	1,155

// Fuel System

Fuel Supply Connection Size	1/2" NPT
Fuel Return Connection Size	1/2" NPT
Maximum Fuel Lift: ft (m)	6.7 (2.1)
Recommended Fuel	Diesel #2
Total Fuel Flow: gal/hr (lit/hr)	88.3 (334)

// Fuel Consumption

	STANDBY	PRIME
At 100% of Power Rating: gal/hr (lit/hr)	31.9 (121)	28.6 (108)
At 75% of Power Rating: gal/hr(lit/hr)	24.7 (93)	21.4 (81)
At 50% of Power Rating: gal/hr (lit/hr)	16.7 (63)	14.5 (55)

// Cooling - Radiator System

	STANDBY	PRIME
Ambient Capacity of Radiator: °F (°C)	122 (50)	122 (50)
Max. Restriction of Cooling Air, Intake, and Discharge Side of Rad.: in. H_20 (kPa)	0.5 (0.12)	0.5 (0.12)
Water Pump Capacity: gpm (lit/min)	96 (363)	96 (363)
Heat Rejection to Coolant: BTUM (kW)	8,750 (154)	8,100 (142)
Heat Rejection to Air to Air: BTUM (kW)	6,250 (110)	4,650 (82)
Heat Radiated to Ambient: BTUM (kW)	5,778 (102)	5,100 (89.7)

// Air Requirements

	STANDBY	PRIME
Aspirating: *SCFM (m^3/min)	1,290 (37)	1,232 (35)
Air Flow Required for Rad. Cooled Unit: *SCFM (m^3/min)	24,657 (698)	24,657 (698)
Air Flow Required for Heat Exchanger/Remote Rad. based on 25°F Rise: *SCFM (m^3/min)	13,030 (371)	11,501 (328)

* Air density = 0.0739 lbm/ft^3 (1.184 kg/m^3)

// Exhaust System

	STANDBY	PRIME
Gas Temp. (Stack): °F (°C)	1,025 (552)	953 (512)
Gas Volume at Stack Temp: CFM (m^3/min)	3,594 (101.8)	3,258 (92.3)
Maximum Allowable Back Pressure: in. H_20 (kPa)	40.8 (10.2)	40.8 (10.2)

WEIGHTS AND DIMENSIONS

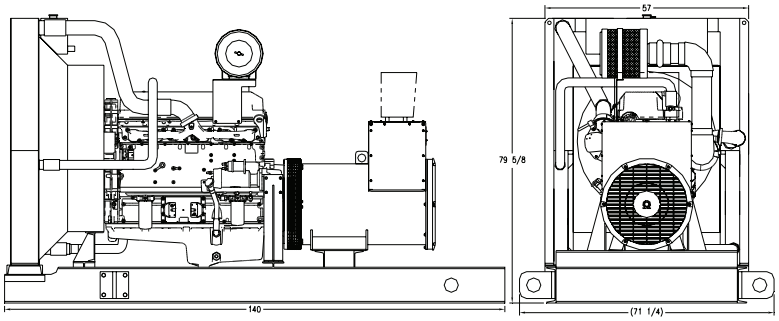

Drawing above for illustration purposes only, based on standard open power 480 volt generator. Lengths may vary with other voltages. Do not use for installation design.

System	Dimensions (L x W x H)	Weight (less tank)
OPU	140 x 57 x 79.6 in (3,556 x 1,446 x 2,022 mm)	6,396 lb (2,901 kg)

Weights and dimensions are based on open power units and are estimates only. Consult the factory for accurate weights and dimensions for your specific generator set.

SOUND DATA

Unit Type	Standby Full Load	Standby No Load	Prime Full Load	Prime No Load
OPU w/Critical Grade Muffler (dBA)	96.5	89	95	89
Sound Attenuated Enclosure (dBA)	88.5	81	87	81

Measurements for sound data are taken at 23 ft (7 m).

EMISSIONS DATA

NO_x + NMHC	CO	PM
2.66	0.98	0.13

All units are in g/hp-hr and are EPA D2 cycle values.
Emission levels of the engine may vary as a function of ambient temperature, barometric pressure, humidity, fuel type and quality, installation parameters, measuring instrumentation, etc. The data provided are laboratory results from one engine representing this rating. The data was obtained under controlled environmental conditions with calibrated instrumentation traceable to the United States National Bureau of Standards and in compliance with US EPA regulations found within 40 CFR Part 89. The weighted cycle value from each engine is guaranteed to be below the US EPA Standards at the US EPA defined conditions.

RATING DEFINITIONS AND CONDITIONS

// Ambient capability factor at 984 ft (300 m). Consult your local MTU Onsite Energy Power Generation Distributor for other altitudes.

// Standby ratings apply to installations served by a reliable utility source. The standby rating is applicable to varying loads for the duration of a power outage. No overload capability for this rating. Ratings are in accordance with ISO-3046/1, BS 5514, AS 2789, and DIN 6271.

// Prime power ratings apply to installations where utility power is unavailable or unreliable. At varying load, the number of generator set operating hours is unlimited. A 10% overload capacity is available for one hour in twelve. Ratings are in accordance with ISO-8528/1, overload power in accordance with ISO-3046/1, BS 5514, AS 2789, and DIN 6271. For limited running time and base load ratings, consult the factory.

// Deration Factor:
Altitude: 1% per 1,000 ft (305 m) above 600 ft (183 m).
Temperature: 1% per 10°F (5.5°C) above 77°F (25°C).

Materials and specifications subject to change without notice.

© MTU Onsite Energy. Subject to alteration due to technological advances. 2009-05

// **Tognum Group Companies: Europe / Middle East / Africa / Latin America /** MTU Onsite Energy / 88040 Friedrichshafen / Germany / Phone + 49 7541 90 7060 / Fax +49 7541 90 7084 / powergenregion1@mtu-online.com // **Asia / Australia / Pacific /** MTU Onsite Energy / 1, Benoi Place / Singapore 629923 / Republic of Singapore / Phone + 65 6861 5922 / Fax + 65 6861 3615 / powergenregion2@mtu-online.com // **USA / Canada / Mexico /** MTU Onsite Energy / 100 Power Drive / Mankato, Minnesota 56001 / USA / Phone + 1 507 625 7973 / Fax + 1 507 625 2968 / powergenregion3@mtu-online.com // **Worldwide for HotModule /** MTU Onsite Energy / 81663 Munich / Germany / Phone + 49 89 203042 800 / Fax +49 89 203042 900 / info@cfc-solutions.com //www.mtu-online.com