THIS DRAWING IS UNPUBLISHED. RELEASED FOR PUBLICATION -
© COPYRIGHT 20 BY - ALL RIGHTS RESERVED.

LOC	DIST
CM	00

REVISIONS

P	LTR	DESCRIPTION	DATE	DWN	APVD
	F	REVISED PER ECO-15-003291	23APR2015	SC	DZ

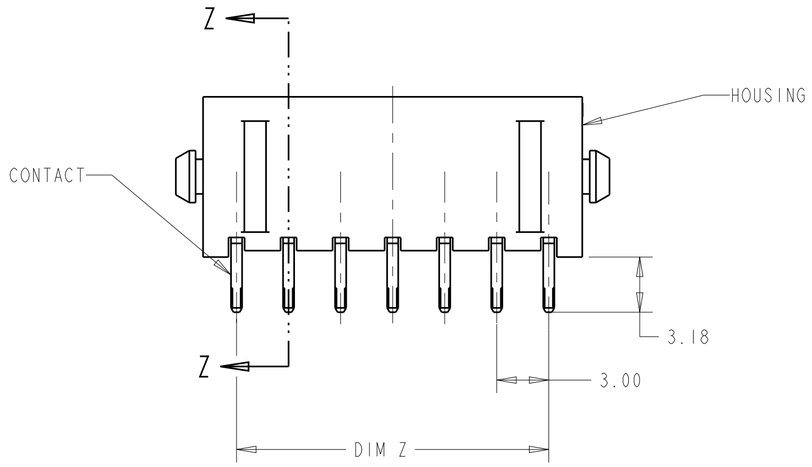

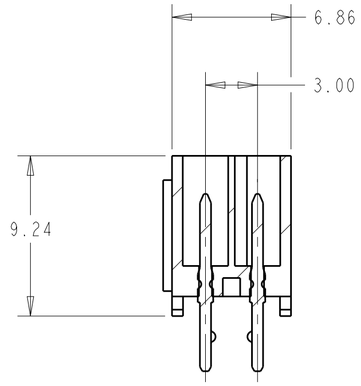

SECTION Z-Z

1. MATERIAL: HOUSING - NYLON, UL 94V-0, BLACK.
   CONTACT - BRASS.
   0.00254 MINIMUM TIN LEAD OVER
   0.00127 MINIMUM NICKEL ALL OVER.
2. MAXIMUM INSERTION 20 LBS.
3. RECOMMENDED BOARD THICKNESS 1.57.
4. MATERIAL: HOUSING - NYLON, UL 94V-0, BLACK.
   CONTACT - BRASS.
   0.00254 MINIMUM TIN OVER
   0.00127 MINIMUM NICKEL ALL OVER.

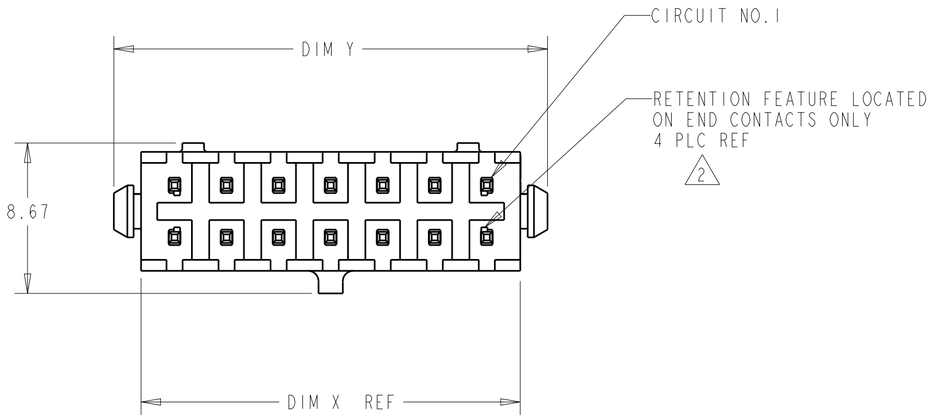

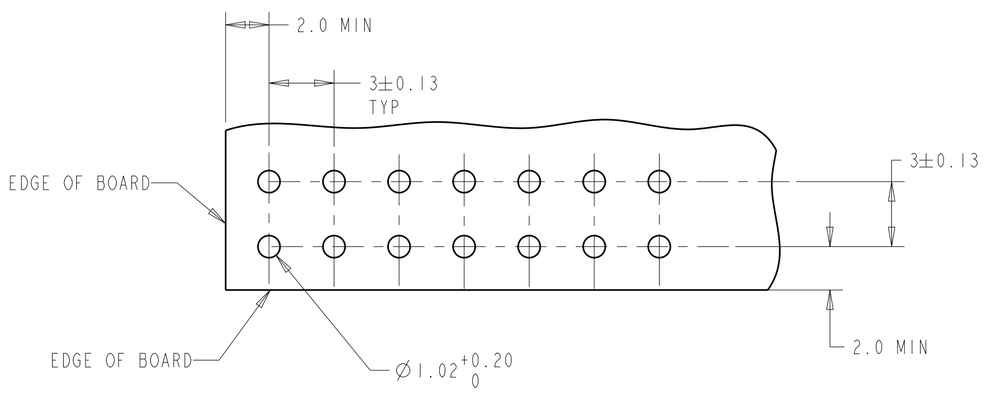

RECOMMENDED MOUNTING HOLE PATTERN 3
SCALE 5:1

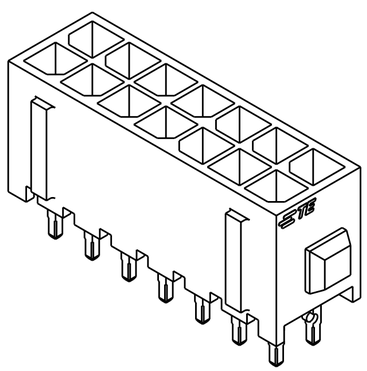

3 DIMENSIONAL MODEL

	FINISH	DIM Y	DIM Z	DIM X	NO. OF POSN.	ASSEMBLY
4		40.00	33.00	36.86	24	5-794630-4
		37.00	30.00	33.86	22	5-794630-2
		34.00	27.00	30.86	20	5-794630-0
		31.00	24.00	27.86	18	4-794630-8
		28.00	21.00	24.86	16	4-794630-6
		25.00	18.00	21.86	14	4-794630-4
		22.00	15.00	18.86	12	4-794630-2
		19.00	12.00	15.86	10	4-794630-0
		16.00	9.00	12.86	8	3-794630-8
		13.00	6.00	9.86	6	3-794630-6
		10.00	3.00	6.86	4	3-794630-4
		7.00	-	3.86	2	3-794630-2
1		40.00	33.00	36.86	24	2-794630-4
		37.00	30.00	33.86	22	2-794630-2
		34.00	27.00	30.86	20	2-794630-0
		31.00	24.00	27.86	18	1-794630-8
		28.00	21.00	24.86	16	1-794630-6
		25.00	18.00	21.86	14	1-794630-4
		22.00	15.00	18.86	12	1-794630-2
		19.00	12.00	15.86	10	1-794630-0
		16.00	9.00	12.86	8	794630-8
		13.00	6.00	9.86	6	794630-6
		10.00	3.00	6.86	4	794630-4
		7.00	-	3.86	2	794630-2

794630

THIS DRAWING IS A CONTROLLED DOCUMENT.

DIMENSIONS: mm[INCHES]

TOLERANCES UNLESS OTHERWISE SPECIFIED:
0 PLC ±-
1 PLC ±-
2 PLC ±0.20[.008]
3 PLC ±-
4 PLC ±-
ANGLES ±-

MATERIAL 1 -
FINISH SEE TABLE

DWN K. WHITAKER 20APR2005
CHK C. JONES 20APR2005
APVD C. JONES 20APR2005
PRODUCT SPEC -
APPLICATION SPEC -
WEIGHT -

TE Connectivity

NAME VERTICAL HEADER ASSEMBLY, THRU HOLE, TIN, DUAL ROW, MICRO MATE-N-LOK(TM)

SIZE	CAGE CODE	DRAWING NO	RESTRICTED TO
A2	00779	C-794630	-

CUSTOMER DRAWING SCALE 4:1 SHEET 1 OF 1 REV F

1471-9 (3/11)