THIS DRAWING IS UNPUBLISHED.
VERTRAULICH - UNVEROEFFENTLICHTE ZEICHNUNG
© COPYRIGHT 2017 BY TE CONNECTIVITY
RELEASED FOR PUBLICATION 2017
FREI FUER VEROEFFENTLICHUNG
ALL RIGHTS RESERVED.
ALLE RECHTE VORBEHALTEN.

MATED WITH:
PASSEND ZU:

CODINGS
SHOWN WITHOUT LEVER - 1:1

THE DRAWING SHOWS THE 2-DIMENSIONAL REFERENCE COMPONENT CONDITION OF THE ASSEMBLY TO IDENTIFY AND SPECIFY THE NECESSARY DIMENSIONS ONLY. THE DELIVERED PARTS MAY DEVIATE FROM THE DRAWING REGARDING THE ORIENTATION AND POSITION OF EACH COMPONENT (e.g. SLACK CABLE). SO FAR THE FUNCTIONALITY IS NOT CONCERNED.

DIE ZEICHNUNG ZEIGT DEN 2-DIMENSIONALEN IDEALZUSTAND DES ZUSAMMENBAUTEILS BEZUEGLICH DER KOMPONENTEN ZUR IDENTIFIKATION UND SPEZIFIKATION DER NOTWENDIGEN DIMENSIONEN. HINSICHTLICH DER ORIENTIERUNG UND DER LAGE DER KOMPONENTEN (z.B. BIEGESCHLAFFES KABEL) KOENNEN DIE GELIEFERTEN TEILE VON DER ZEICHNUNG ABWEICHEN. SOFERN DIE FUNKTIONALITAET NICHT BEEINTRAECHTIGT IST.

PROJEKT NR.
PRJ-11-00000198 3

REVISIONS
AENDERUNGEN

P	LTR	DESCRIPTION BESCHREIBUNG	DATE	DWN	APVD
	B3	NEW VARIANTS ADDED	14MAR2018	JM	JJ
	B4	LABEL EDIT	26JUN2018	JS	JS
	B5	NOTES AND LABEL LEGEND UPDATED	11OCT2018	JM	JJ
	B6	NEW VARIANTS ADDED	08NOV2018	JM	JJ

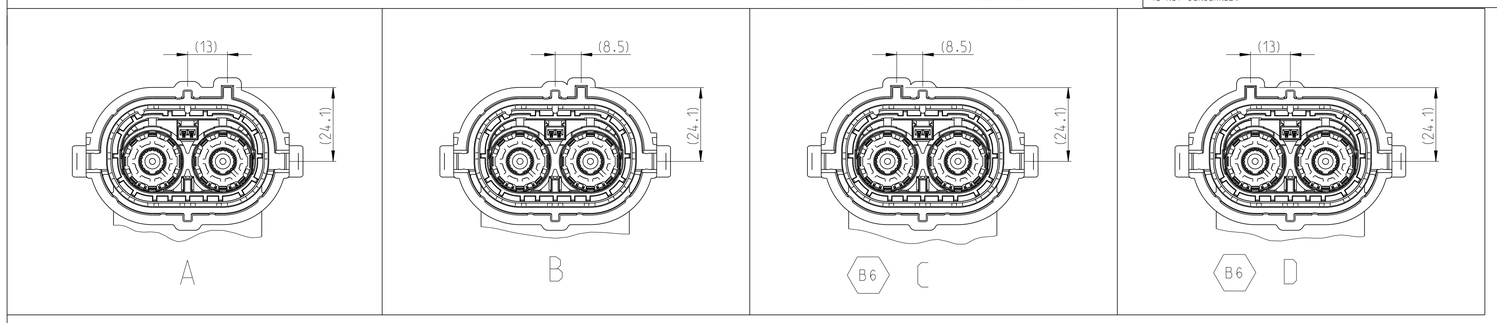

NOTES

1 PACKAGING:
EACH HOUSING OF THE CABLE ASSEMBLY TO BE INDIVIDUALLY WRAPPED IN FOAM (PN 741639-2) AND FIXED WITH RUBBER BAND (PN 1-2000064-0).
PACKED IN STANDARD SHIPPING BOX VERTICAL SIDES OVERLAID WITH PAPER CUSHIONS (PN 740045-2) ACCORDING TE SPEC. 107-18032.
DAMAGED TO BE AVOIDED.

2 ELECTRICAL TEST ACCORDING TE SPECIFICATION 108-18857.
USE CURRENT REVISION ALWAYS.
MIN. 10 mm STRIPPING OF OUTER JACKET AND BRAID FOR ELECTRICAL TEST PURPOSE.

3 PRODUCT SPECIFICATION: 108-94268, 108-94256
APPLICATION SPECIFICATION: 114-94052, 114-94083

4 MANUFACTURING CODE:
TE PART NO., CURRENT REV. LEVEL AND DATE CODE (DD.MM.YY).
TO BE PRINTED ON LABEL (ITEM 10).
LABEL TO BE APPLIED TO THE CABLE AFTER SUCCESSFUL ELECTRICAL TEST.

5 LEVER POSITION: CLOSED ON DELIVERY.

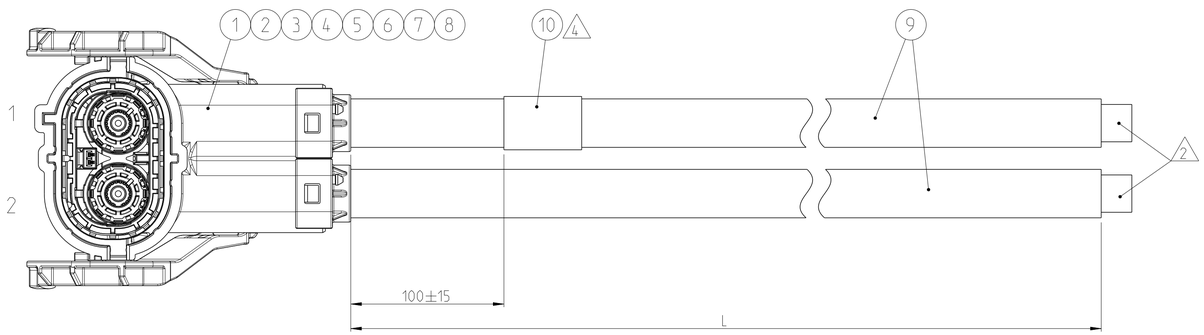

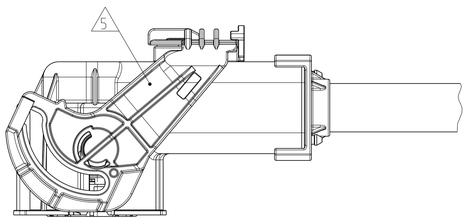

4 LABEL LEGEND:

TE
TE PN: X-2286945-Y Rev. __ — CURRENT REV.
DD/MM/YY — DATE CODE
2.7 kV DC TEST PASSED

TE PART NO.	REV.	LENGTH L [mm]	TOL. [mm]	CODING
1-2286945-0	B	500	+30	A
1-2286945-1	B	1000	+30	
1-2286945-2	B	2000	+35	
1-2286945-3	B	3000	+40	
1-2286945-4	B	4000	+50	
1-2286945-5	B	5000	+60	
1-2286937-6	A	10000	+90	
2-2286945-0	B	500	+30	B
2-2286945-1	B	1000	+30	
2-2286945-2	B	2000	+35	
2-2286945-3	B	3000	+40	
2-2286945-4	B	4000	+50	
2-2286945-5	B	5000	+60	
2-2286937-6	A	10000	+90	
3-2286945-0	A	500	+30	C
3-2286945-1	A	1000	+30	
3-2286945-2	A	2000	+35	
3-2286945-3	A	3000	+40	
3-2286945-4	A	4000	+50	
3-2286945-5	A	5000	+60	
4-2286945-0	A	500	+30	D
4-2286945-1	A	1000	+30	
4-2286945-2	A	2000	+35	
4-2286945-3	A	3000	+40	
4-2286945-4	A	4000	+50	
4-2286945-5	A	5000	+60	

B6

QTY 4- -X	QTY 3- -X	QTY 2- -X	QTY 1- -X	DESCRIPTION	ITEM NO.
1	1	1	1	LABEL, HELL, TYP 323, 25.4 x 95.25	10
see table	see table	see table	see table	1 POS. POWER CABLE, 50 SQMM	9
2	2	2	2	PROTEC. COVER 8 MM HV, 90 DEG, 50 SQMM	8
2	2	2	2	SINGLE WIRE SEAL, 8 MM HV, 90 DEG, 50 SQMM	7
2	2	2	2	SHIELD CRIMP FERRULE, 90 DEG	6
2	2	2	2	SHIELDING SLEEVE, 90 DEG	5
2	2	2	2	FINGER PROTECTION CAP 8 MM HV, 90 DEG	4
2	2	2	2	HV 8 MM, DEEP DRAWN SOCKET PIN, 90 DEG., ASSEMBLY	3
2	2	2	2	HV 8 MM, DEEP DRAWN SOCKET PIN, 90 DEG., ASSEMBLY	2
1	-	-	-	2 POS. 8 MM HV, REC HSG, 90 DEG, ASSY, SEALED, COD D	1
-	1	-	-	2 POS. 8 MM HV, REC HSG, 90 DEG, ASSY, SEALED, COD C	
-	-	1	-	2 POS. 8 MM HV, REC HSG, 90 DEG, ASSY, SEALED, COD B	
-	-	-	1	2 POS. 8 MM HV, REC HSG, 90 DEG, ASSY, SEALED, COD A	

B6

PRODUCT CHARACTERISTICS ACC. QMP EMEA_12
BESONDERE MERKMALE NACH QMP EMEA_12

TOLERANCING ISO 8015
TOLERIERUNG ISO 8015

DIESE ZEICHNUNG IST EIN KONTROLLIERTES DOKUMENT.
BEMASSUNGEN UND TOLERANZEN GEMAESS GPS (ISO STANDARDS).
THIS DRAWING IS A CONTROLLED DOCUMENT.
DIMENSIONING AND TOLERANCING PER GPS (ISO STANDARDS).

DIMENSIONS: MASSEINHEITEN: mm
TOLERANCES UNLESS OTHERWISE SPECIFIED: ALLGEMEINTOLERANZEN
0 PLC ±
1 PLC ±
2 PLC ±
3 PLC ±
4 PLC ±
ANGLES/WINKEL ±
MATERIAL -
FINISH/OBERFLAECHE/FARBE -

DWN D. Snajder 05MAR2015
CHK J. Janecka 05MAR2015
APVD R. Hort 05MAR2015
PRODUCT SPEC PRODUKTSPEZ. see note 3
APPLICATION SPEC VERARBEITUNGSSPEZ. see note 3
WEIGHT GEWICHT -

TE Connectivity

NAME
2 POS. HVP800, 90, 50 SQMM, CABLE ASSY
-

SIZE A1 | CAGE CODE - | DRAWING NO ZEICHNUNGS-NR. C-2286945 | RESTRICTED TO NUR FUER -

Customer Drawing /KUNDENZEICHNUNG | SCALE MASSSTAB 1:1 | SHEET BLATT 1 OF VON 1 | REV. B6