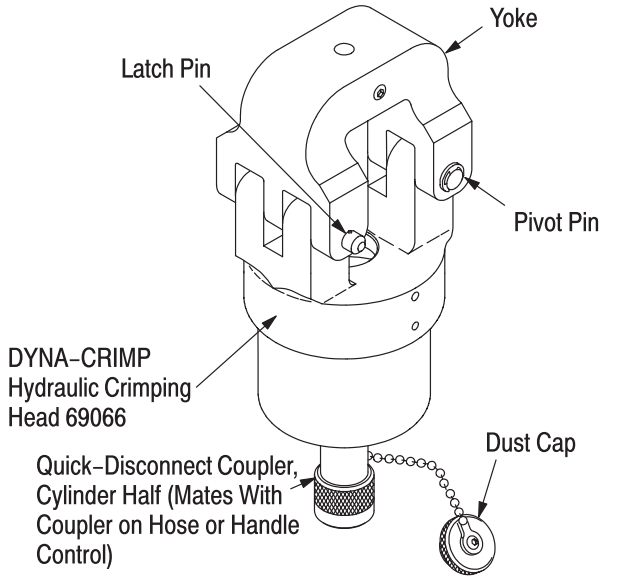

Figure 1

1. INTRODUCTION

This instruction sheet provides application, inspection, and maintenance procedures for DYNA–CRIMP Crimping Head 69066 (see Figure 1). This crimping head uses interchangeable crimping dies and is used to crimp products listed in Figure 2. The instructions include general information for the insertion of dies and the crimping procedure. The crimping head is designed for either Hydraulic Foot Pump 314979–1 covered in Customer Manual 409–5860, or Hydraulic Power Unit 69120–[ ] described in 409–1950. Always refer to the instructions packaged with the dies for specific crimping instructions.

NOTE

Dimensions on this sheet are in millimeters [with inches in brackets]. Figures and illustrations are for reference only and are not drawn to scale.

Reasons for reissue are provided in Section 8, REVISION SUMMARY.

2. DESCRIPTION

Main components of the crimping head are: a yoke which houses the stationary die and retains the terminal assembly for crimping, a removable latch pin which allows pivoting of the yoke on the pivot pin (typically required for splice terminations), a cylinder which contains the head's hydraulic chamber, a piston (ram) which holds and controls the moving die, and a quick connect/disconnect coupler (cylinder half) which mates with the coupler on hose or handle control to release or supply pressure.

DANGER

To avoid injury when using DYNA–CRIMP equipment, observe the following precautions:
– Do NOT modify the crimping equipment in any way.
– Use only dies, terminals, and wire specified for the head.
– Do NOT perform repairs other than those specified in the instructional material supplied with the equipment.

3. CRIMPING HEAD INSTALLATION

Each crimping head is shipped with a coating of lubricating oil to prevent rust and corrosion. Wipe the oil off before installing the crimping head on the power unit. Note that the crimping head is shipped without oil inside the cylinder. To install crimping head, proceed as follows:

DANGER

Make sure that hydraulic pressure to hose or handle control is released and that power supply is disconnected to electric power unit, if applicable.

NOTE

If a coupling component for the hose assembly is packaged inside the quick connect/disconnect coupler on the head, it is to be used to replace the coupling on a hose assembly not equipped with a quick connect/disconnect coupler.

1. Thoroughly clean coupling area of handle control or hose assembly and crimping head. See Figure 1.

2. Remove protective dust caps from both quick connect/disconnect couplers.

PRODUCTS CRIMPED	CORRESPONDING DIE SET INSTRUCTION SHEET
AMPLI–BOND* and PLASTI–GRIP* Terminals, 8–4/0 AWG	408–1724
TERMINYL* Terminals and Splices, 1/0–4/0 AWG	408–1729
Pre–Insulated AMPOWER* Terminals, 1/0 AWG	408–1729
Pre–Insulated Nylon Heavy Duty Terminals, 8–1/0 AWG	408–1936
COPALUM* Sealed Terminals and Splices, Aluminum 8–1/0; Copper 10–2 AWG	408–2281

Figure 2

©2007 Tyco Electronics Corporation, Harrisburg, PA
All International Rights Reserved
TE logo and Tyco Electronics are trademarks.
*Trademark. Other products, logos, and company names used are the property of their respective owners.

3. Hold hose or handle control in vertical position to prevent oil spillage. Attach hose or handle control to coupling section on head. Thread properly and tighten securely.

CAUTION

Oil flow must be unobstructed between power unit and crimping head. Make sure that all couplers are fully mated and tightened.

CAUTION

If crimping head must be removed after being in production, pressure must be released in the hydraulic system before head is removed.
– If using Hydraulic Power Unit 69120-[ ], DISCONNECT POWER UNIT FROM POWER SUPPLY.
– If using Hydraulic Foot Pump 314979-1, depress pressure release pedal.

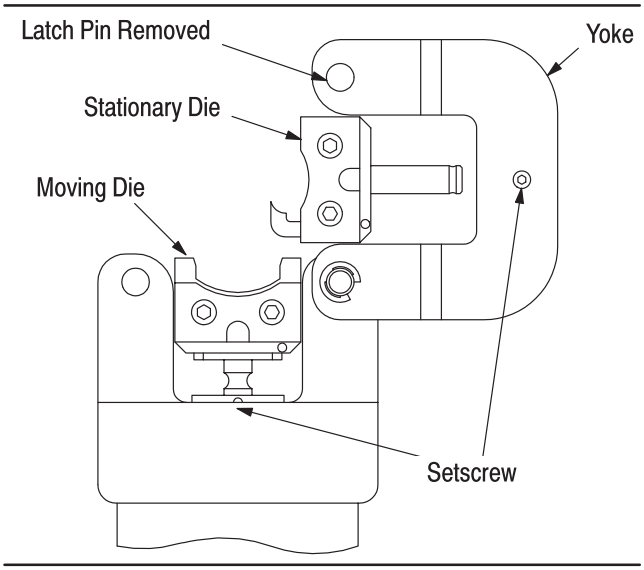

Figure 3

4. DIE INSERTION AND REMOVAL (Figure 3)

DANGER

Avoid personal injury. When using power unit, exercise caution to avoid accidently depressing foot pedal or handle control when installing or changing dies.

4.1. Die Insertion

1. Remove latch pin and open yoke on crimping head.

2. Activate power unit to advance ram slightly to gain access to the ram setscrew which secures the moving die.

3. The stationary die is secured by the yoke setscrew. Refer to the instructions packaged with the dies for specific instructions.

4. After the dies are installed, leave the yoke open until the ram is returned to the rest position.

4.2. Die Removal

1. Remove latch pin and open yoke on crimping head.

2. Activate power unit to advance ram slightly to gain access to the ram setscrew which secures the moving die.

3. Raise ram to full UP position.

4. Insert screwdriver under moving die and pry out of ram.

5. The stationary die is secured by the yoke setscrew. Refer to instructions packaged with the dies for specific instructions.

NOTE

Latch Pin Kit 69709-2 is available as an accessory item. The latch pin is attached to the pivot pin by a chain to avoid misplacing the latch pin.

5. CRIMPING PROCEDURE

DANGER

Avoid personal injury. When operating power unit, exercise caution while holding terminals, splices, or wire near crimping area.

The following crimping procedure provides general information. Refer to instructions packaged with individual die sets for specific products, wire sizes, strip dimensions, positioning of terminals and splices in the dies, and crimping procedures.

CAUTION

Never operate the power unit without having a crimping head attached to the handle control or crimping head coupling.

1. Insert terminal or splice in the stationary (upper) die according to instructions packaged with the dies. Make sure the latch pin is secure before activating the power unit.

2. Slowly advance moving (lower) die with short, quick strokes until terminal or splice is secure.

3. Insert the stripped wire.

4. Cycle tool to complete crimp. Remove crimped terminal or splice.

NOTE

If the splice or terminal sticks in the die after crimping, apply a rocking action to remove the crimped terminal or splice from the die.

6. INSPECTION/MAINTENANCE



Make sure hydraulic pressure is released and power supply is disconnected before following inspection and maintenance procedures, unless otherwise specified in the procedure.

Each crimping head is assembled and inspected before shipment. Tyco Electronics recommends that the crimping head be inspected immediately upon its arrival at your facility, and at regularly scheduled intervals, to ensure that the crimping head has not been damaged during handling. Frequency of inspection depends upon the following: care, amount of use, and handling of the head; type and size of products crimped; degree of operator skill; and environmental conditions.

6.1. Cleaning

Remove accumulations of dirt and grease on the crimping head, especially in areas where dies are installed and terminals are crimped. Clean the entire head frequently with a clean, lint–free cloth.

6.2. Visual Inspection

Refer to Figure 4 and proceed as follows:

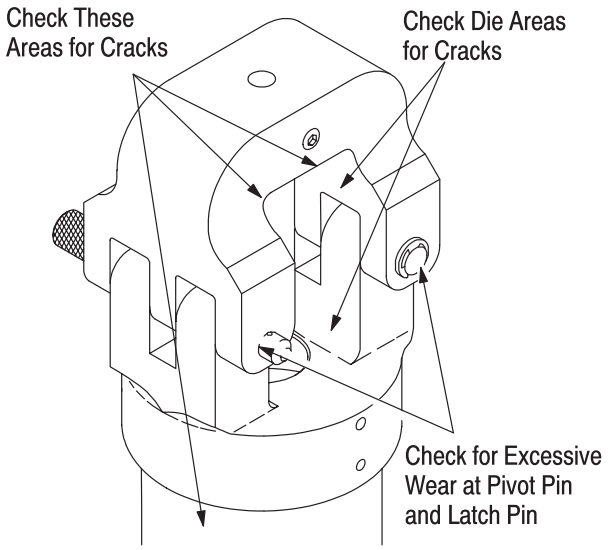

Figure 4

1. With hydraulic pressure released, inspect the assembled head for nicks, scratches, and cracks. Inspect for cracks especially at the corners of the yoke and around the top of the cylinder.

2. Inspect pivot pin holes and latch pin holes for wear. Replace parts, as needed.

3. Activate power unit. Raise ram to UP position. Inspect flat and round surfaces of ram for galling (fretting or wear by friction), cracks, or oil leakage. Release pressure and make sure that ram retracts smoothly.

4. If head shows evidence of galling, cracks, oil leakage, or rough cycling, return the crimping head to Tyco Electronics for repairs. (Refer to Section 7, REPLACEMENT AND REPAIR).

6.3. Crimping Head Check–Out Procedure

If the ram fails to return to the DOWN position after completion of a crimping cycle, the cause may be in the crimping head. To determine whether or not the trouble is in the crimping head, release pressure in the power unit. If the ram retracts, the trouble is not in the crimping head. If ram does NOT retract, refer to Paragraph 6.4.

6.4. Crimping Head Disassembly Procedure (Figure 5)

Numbers in parentheses refer to Item Numbers in Figure 5.

1. If the head is attached to Hydraulic Power Unit No. 69120–[ ], release the pressure by pressing the pressure release button on the electrical control box. Hold it for several seconds. Proceed to Step 3 below.

2. If the head is attached to Hydraulic Foot Pump No. 314979–1, release the pressure in the head by pressing the return pedal on the foot pump.

3. Unscrew the collar of the coupler on the head.

4. Remove the crimping head and place it in a vise. Use a suitable material to protect the finish on the head.

5. Remove the set screw (9) that secures the head assembly to the cylinder.

6. Remove the guide lock screw (10) and loosen the guide set screw (11) enough to permit the head to be turned counterclockwise without turning the ram.

7. Turn the head sub–assembly counterclockwise to remove it from the threaded cylinder.

8. Remove the ram (5), bushing (13), and ram return spring (8).

9. Inspect for deteriorated or torn ram O–ring (6) or back–up ring (7). Replace with new parts if damaged.

10. Apply a thin film of hydraulic fluid (same type used in power unit reservoir) on the surface of the O–ring and back–up ring installed on the ram.

11. Install the ram (5), bushing (13), and ram return spring (8) in the cylinder.

12. Install the head sub–assembly on the threaded cylinder but do not tighten.

13. Turn the guide set screw (11) clockwise into the slot in the ram to prevent the ram from turning. Be sure that the screw does not prevent the ram from moving freely.

14. Install the guide lock screw (10) securely against the guide set screw (11).

15. Tighten the cylinder head assembly and install and tighten the set screw (9).

16. To install the crimping head, refer to Section 3, CRIMPING HEAD INSTALLATION.

7. REPLACEMENT AND REPAIR

Customer–replaceable parts are listed in Figure 5. A complete inventory can be stocked and controlled to prevent lost time when replacement of parts is necessary. Order replacement parts through your Tyco Electronics Representative, or call 1–800–526–5142, or send a facsimile of your purchase order to 1–717–986–7605, or write to:

CUSTOMER SERVICE (38–35)
TYCO ELECTRONICS CORPORATION
P.O. BOX 3608
HARRISBURG, PA 17105–3608

Tools may also be returned for evaluation and repair. For tool repair service, contact a Tyco Electronics Representative at 1–800–526–5136.

8. REVISION SUMMARY

Revisions to this document include:

- Updated document to corporate requirements
- New format
- Changed title
- Changed superceded part numbers in Section1, INTRODUCTION; CAUTION in Paragraph 3.3; and Paragraph 6.4.2.
- Deleted obsolete instruction sheet in NOTE in Section 3, CRIMPING HEAD INSTALLATION

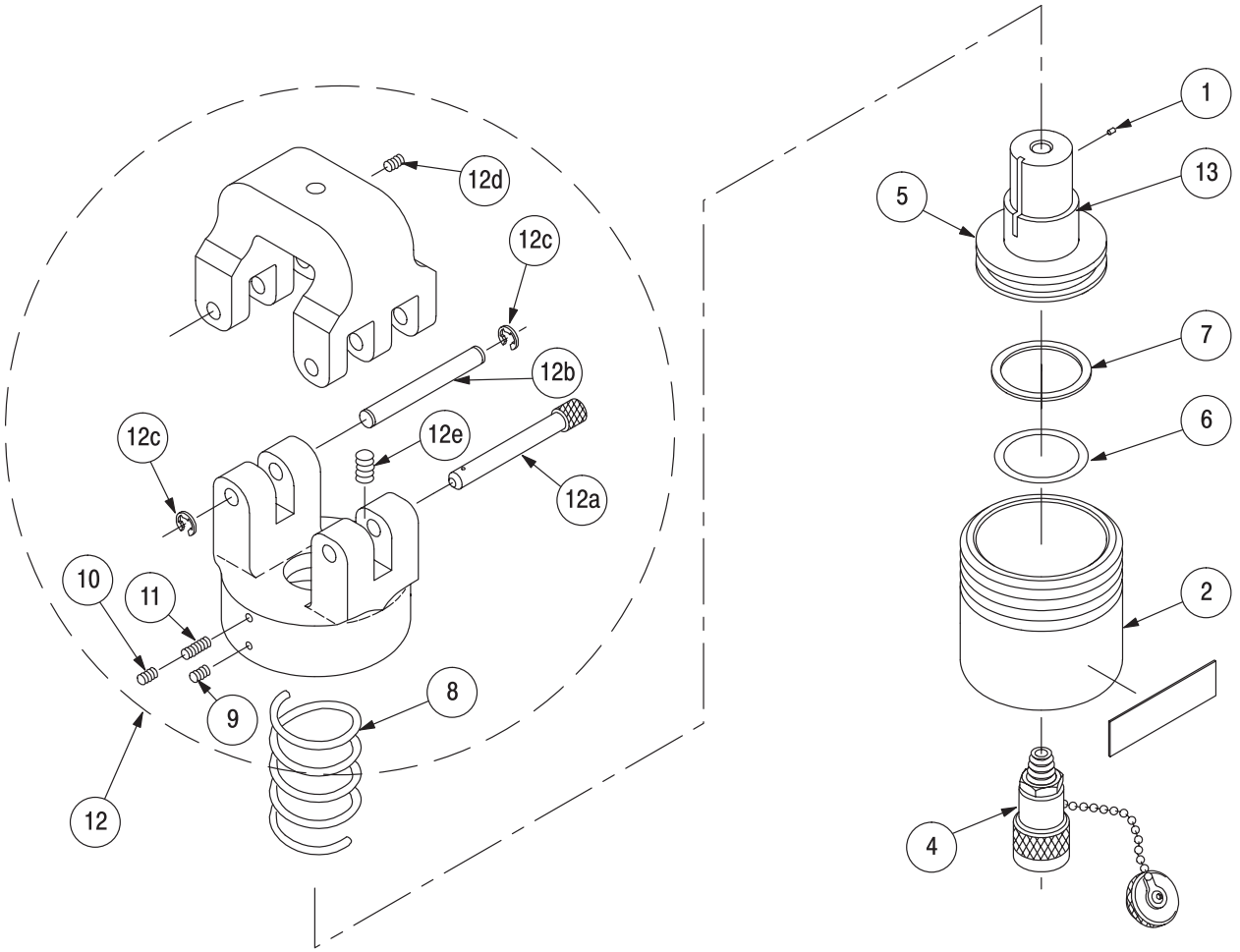

Figure 5 (contd)

ITEM NUMBER	PART NUMBER	DESCRIPTION	QUANTITY PER HEAD
1	4-21012-0	Screw, Socket Set Self-locking (Flat Point) 8-32 UNC x .250 in. Lg.	1
2	46000	Cylinder	1
4	311471-1	Coupler, Quick-disconnect, Cylinder Half	1
5	314952-1	Piston (Ram)	1
6	3-21053-4	O-Ring, 2.625 in. O.D. x 2.250 in. I.D. x .188 in. Width	1
7	2-21107-8	Ring, Back-up	1
8	300680	Spring, Ram Return	1
9	4-21012-0	Screw, Socket Set (Cone Point) 8-32 UNC x .313 in. Lg.	1
10	4-21010-1	Screw, Socket Set (Flat Point) 8-32 UNC x .313 in. Lg.	1
11	21059-5	Screw, Socket Set (Half Dog Point) 8-32 UNC x .500 in. Lg.	1
12	307002-1	Cylinder Head And Yoke Assembly (Contains following hardware parts)●	1
12a	306209-4	Pin, Latch	1
12b	303598	Pin, Retaining	1
12c	21045-9	Ring, Retaining	2
12d	4-21012-0	Screw, Socket Set Self-locking 8-32 UNC-3A x .250 in. Lg.	1
12e	5-21008-2	Screw, Socket Set (Cup Point) Self-locking 4-40 UNC x .375 in. Lg.	1
13	311833-2	Bushing	1

●The head and yoke must be ordered and replaced as a machine fit assembly, (part number 307002-1). All other parts of the crimping head, including items 12a through 12e, may be ordered and replaced separately.

Figure 5 (end)