THIS DRAWING IS UNPUBLISHED. RELEASED FOR PUBLICATION 2006
© COPYRIGHT 2006 - ALL RIGHTS RESERVED.

LOC	DIST
A1	–

REVISIONS

P	LTR	DESCRIPTION	DATE	DWN	APVD
	A3	REVISED PER ECO-11-008493	22APR2011	HMR	MM
	A4	ECR-15-008928	18JUN2015	GS	JB

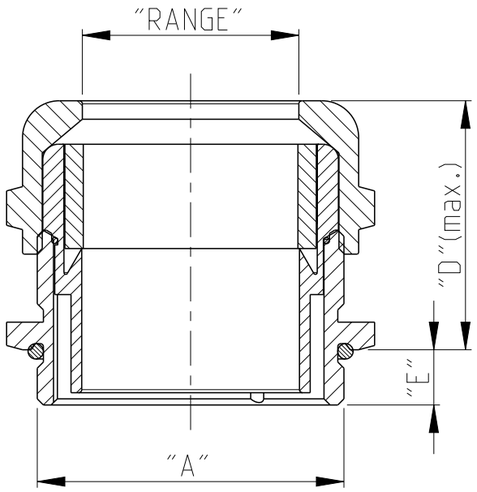

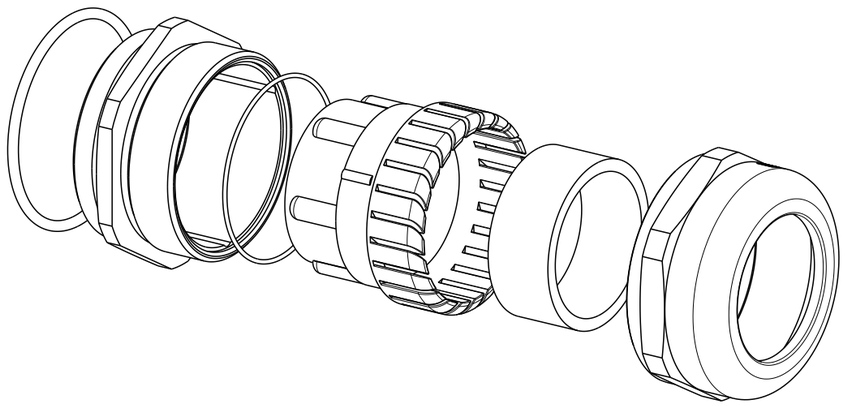

EXPLODED VIEW

Notes

1 MATERIALS:
DOME NUT & GLAND BODY : BRASS CuZn39Pb3, NICKEL-PLATED
LAMELLAR INSERT: POLYAMIDE PA6 V-2
SEALING RING: POLYCHLOROPRENE-NITRILE RUBBER CR/NBR
O-RING: NITRILE RUBBER NBR

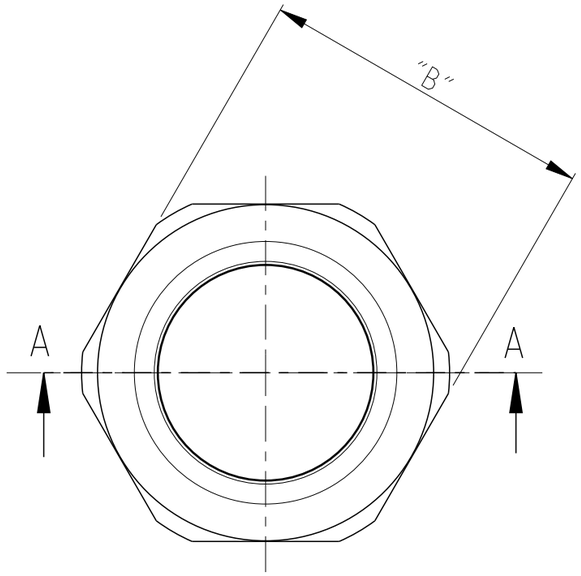

PART NO.	DESCRIPTION	"A"	"B"	"E"	"D"	"RANGE"
		DIMENSIONS				
5-0	HUT.M50.MS	M50x1.5	SW 55	9	40.5	∅24-35
4-0	HUT.M40.MS	M40x1.5	SW 43	8	33.0	∅19-27
3-2	HUT.M32.MS	M32x1.5	SW 34	8	30.0	∅14-21
2-5	HUT.M25.MS	M25x1.5	SW 27	7	29.5	∅11-16
2-0	HUT.M20.MS	M20x1.5	SW 22	6	27.5	∅9-13
1-6	HUT.M16.MS	M16x1.5	SW 17	5	25.0	∅5-9

THIS DRAWING IS A CONTROLLED DOCUMENT.

DIMENSIONS: mm

TOLERANCES UNLESS OTHERWISE SPECIFIED:
0 PLC ±-
1 PLC ±-
2 PLC ±-
3 PLC ±-
4 PLC ±-
ANGLES ±1°

MATERIAL –
FINISH –

DWN H.BRAUN 20DEC2006
CHK –
APVD T.SCHNURPFEIL 20DEC2006
PRODUCT SPEC –
APPLICATION SPEC –
WEIGHT –

TE Connectivity

NAME
ASS'Y CABLE GLAND
SERIES HUT-MS, METRIC
–

SIZE	CAGE CODE	DRAWING NO	RESTRICTED TO
A3	00779	C-1102770	–

CUSTOMER DRAWING | SCALE 1:1 | SHEET 1 OF 1 | REV A4