This document was generated on 04/27/2010

PLEASE CHECK WWW.MOLEX.COM FOR LATEST PART INFORMATION

Part Number: 0399600103

Status: Active

Description: 8.00mm (.315") Beau™ Eurostyle™ Fixed Mount PCB Terminal Block, High Voltage 3 Circuits

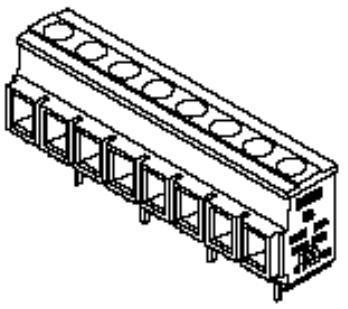

Series image - Reference only

Documents:

3D Model
Drawing (PDF)
RoHS Certificate of Compliance (PDF)

General

Product Family	Terminal Blocks
Series	39960
Application	Wire-to-Board
Component Type	One Piece
Product Literature Order No	USA-199
Product Name	Eurostyle™Fixed Mount
Type	Euro Block

Physical

Circuits (Loaded)	3
Circuits (maximum)	3
Color - Resin	Black
Entry Angle	Horizontal
Lock to Mating Part	None
Material - Metal	High Performance Alloy (HPA)
Material - Plating Mating	Tin
Material - Plating Termination	Tin
Material - Resin	Polyester
Number of Rows	1
Orientation	Vertical
PC Tail Length (in)	0.160 In
PC Tail Length (mm)	4.06 mm
PCB Retention	None
Panel Mount	No
Pitch - Mating Interface (in)	0.315 In
Pitch - Mating Interface (mm)	8.00 mm
Pitch - Term. Interface (in)	0.315 In
Pitch - Term. Interface (mm)	8.00 mm
Plating min: Mating (µin)	150
Plating min: Mating (µm)	3.75
Plating min: Termination (µin)	150
Plating min: Termination (µm)	3.75
Polarized to Mating Part	N/A
Shrouded	Fully
Stackable	No
Surface Mount Compatible (SMC)	No
Temperature Range - Operating	130°C
Wire Size AWG	10, 12, 14, 16, 18, 20, 22
Wire Size mm²	0.50 - 4.00

Electrical

Current - Maximum per Contact	30A
Voltage - Maximum	600V

Material Info

Old Part Number	960503

EU RoHS
ELV and RoHS Compliant
REACH SVHC
Not Reviewed
Halogen-Free Status
Not Reviewed

China RoHS

Need more information on product environmental compliance?

Email productcompliance@molex.com
For a multiple part number RoHS Certificate of Compliance, click here

Please visit the Contact Us section for any non-product compliance questions.

Search Parts in this Series
39960Series

Mates With
N/A

Reference - Drawing Numbers

Sales Drawing	SD-39960-002

This document was generated on 04/27/2010

PLEASE CHECK WWW.MOLEX.COM FOR LATEST PART INFORMATION

MATERIAL NO.	NUMBER OF CIRCUITS "XX"	DIM. "A"	DIM. "B"
39960-0103	03	24.9 [.98]	16.00 [.630]
39960-0104	04	32.9 [1.30]	24.00 [.945]
39960-0105	05	40.9 [1.61]	32.00 [1.260]
39960-0106	06	48.9 [1.93]	40.00 [1.575]
39960-0107	07	56.9 [2.24]	48.00 [1.890]
39960-0108	08	64.9 [2.56]	56.00 [2.205]
39960-0109	09	72.9 [2.87]	64.00 [2.520]
39960-0110	10	80.9 [3.19]	72.00 [2.835]
39960-0111	11	88.9 [3.50]	80.00 [3.150]
39960-0112	12	96.9 [3.82]	88.00 [3.465]

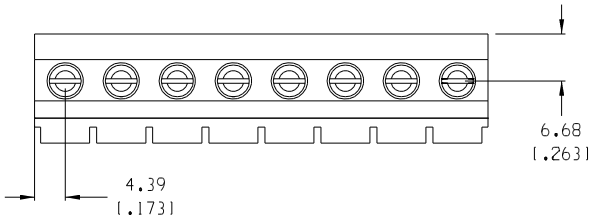

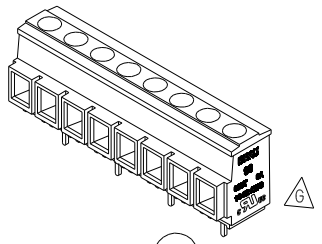

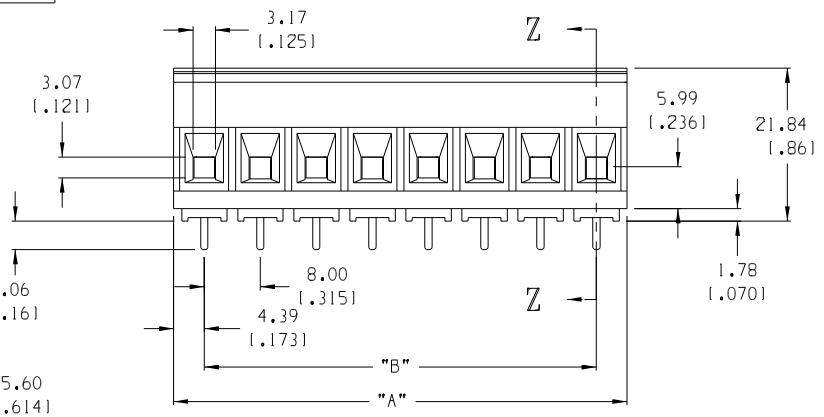

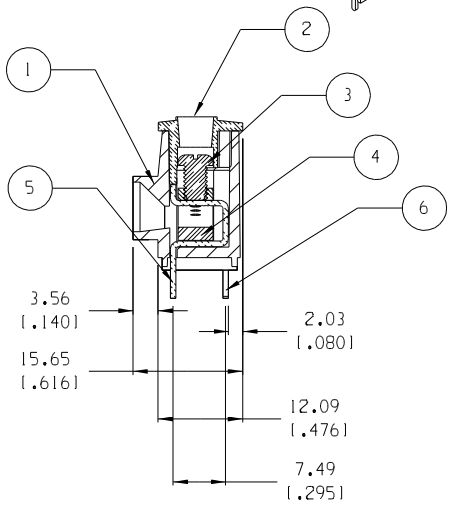

SECTION Z-Z

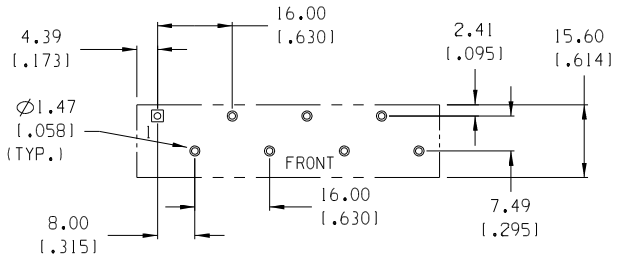

PTH PATTERN

NOTES:

1. MATERIAL: SEE TABLE
2. FINISHES: SEE TABLE
3. PRODUCT SPECIFICATION: NOT REQUIRED
4. PACKAGING: NOT REQUIRED
5. MATES WITH: NONE
6. ALL CREEP DISTANCES FOR UL 1059, CLASS C, 600V GENERAL INDUSTRIAL.
7. FOR USE WITH #22-#10 AWG SOLID AND STRANDED WIRES.
8. TORQUE RATING IS 7 IN-LB.
9. "XX" REFERS TO THE NUMBER OF CIRCUITS.

ITEM	QTY.	DESCRIPTION	MATERIAL	FINISH
6	XX/2	REAR TERMINAL	BRASS	TIN
5	XX/2	FRONT TERMINAL	BRASS	TIN
4	XX	CAGE	BRASS	NICKEL
3	XX	SCREW, M3.5 X 0.6	BRONZE	TIN
2	1	COVER	THERMOPLASTIC	BLACK
1	1	BODY	THERMOPLASTIC	BLACK

EC NO. ECN 3920 | DRWN: JF 12-20-04 | CH'K: | APPR: | DESCRIPTION | REV: G

QUALITY SYMBOLS
MAJOR ▼:
CRITICAL (C):

GENERAL TOLERANCES: (UNLESS SPECIFIED)

	mm	INCH
4 PLACES		±.0015
3 PLACES	±.038	±.005
2 PLACES	±.13	±.01
1 PLACE	±.3	
ANGULAR:	±2°	

DRAFT WHERE APPLICABLE MUST REMAIN WITHIN DIMENSIONS

SCALE 3:2 | DESIGN UNITS ☐ mm ☒ INCH | THIRD ANGLE PROJECTION

DRAWN BY & DATE: GHR 3-19-02
CHECKED BY & DATE: A.PLAZA 6-18-02
APPROVED BY & DATE: L.ROTHAUS 6-18-02
CAD FILENAME: 9605-XX

DIMENSIONS: ☒ mm/INCH ☐ INCH/mm ☐ mm ONLY | SHT | REV | REVISE ON CAD ONLY

TITLE: SR BTS, PCKT, #10 AWG, ASSY 600V, 30A

MOLEX INCORPORATED

MATERIAL NO.: SEE CHART
DRAWING NO.: SD-39960-002
SHEET NO.: 1 OF 1

THIS DRAWING CONTAINS INFORMATION THAT IS PROPRIETARY TO MOLEX INCORPORATED AND SHOULD NOT BE USED WITHOUT WRITTEN PERMISSION.

SIZE B