394828

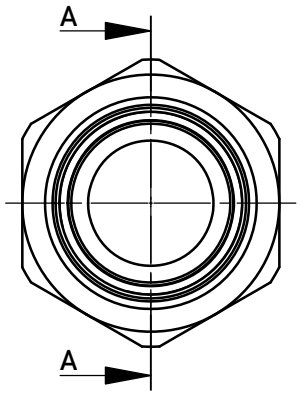

Schnitt A-A

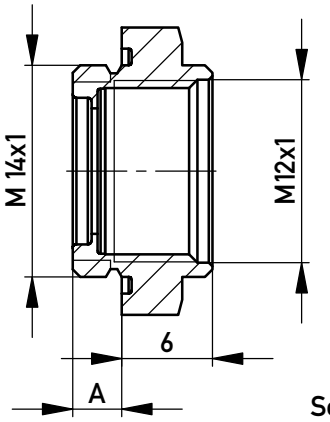

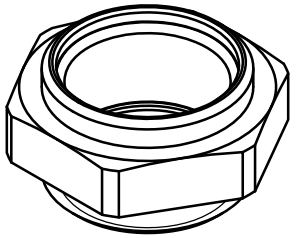

394847

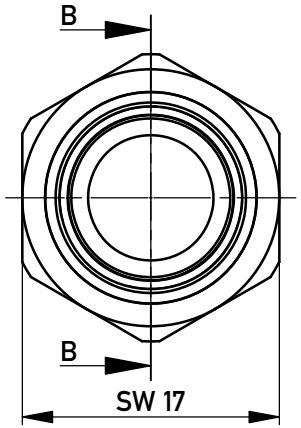

Schnitt B-B

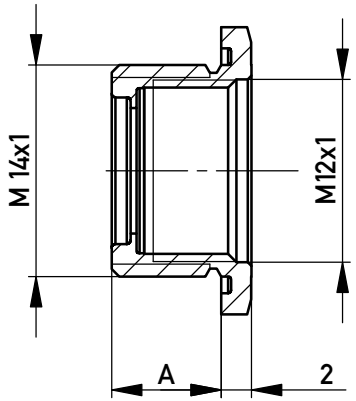

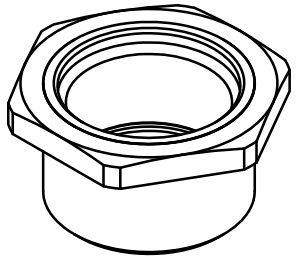

394847	7,25	Abstand : 13 mm */ distance 13 mm*
394828	3,25	Abstand : 9 mm */ distance 9mm*
Id.-Nr.:	Maß A	Bemerkung

Copyright by ERNI GmbH
Proprietary notice pursuant to ISO 16016 to be observed.

Information:

Tolerances

All Dimensions in mm

Scale 2:1

All rights reserved.
Only for Information.
To ensure that this is the latest version of this drawing, please contact one of the ERNI companies before using.

Subject to modification without prior notice.
Drawing will not be updated.

Designation

M12 Gehäuseteil für *Federleiste M12 / CAT6A*

ERNI www.ERNI.com

394848

I

A4

Index		26.08.2010	Date		Class	MRDEZT