390-013
Submersible EMI/RFI Cable Sealing Backshell
with Strain Relief
Type A - Rotatable Coupling - Standard Profile

CONNECTOR DESIGNATOR

G

ROTATABLE COUPLING

TYPE A OVERALL SHIELD TERMINATION

390 G S 013 M 17 10 H 6

- Product Series
- Connector Designator
- Angle and Profile
  - H = 45°
  - J = 90°
  - S = Straight
- Basic Part No.
- Finish (Table II)
- Shell Size (Table I)
- Cable Entry (Tables X, XI)
- Strain Relief Style (H, A, M, D)
- Length: S only (1/2 inch increments: e.g. 6 = 3 inches)

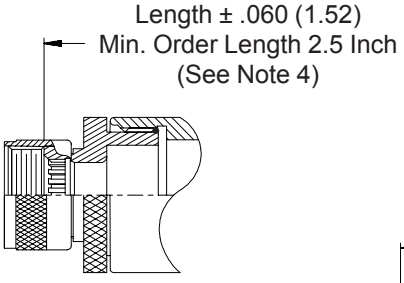

STYLE 2 (STRAIGHT See Note 1)

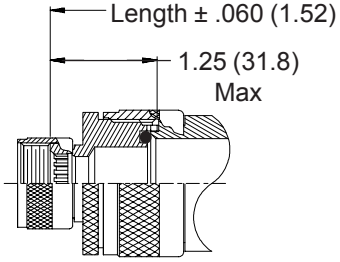

STYLE 2 (45° & 90° See Note 1)

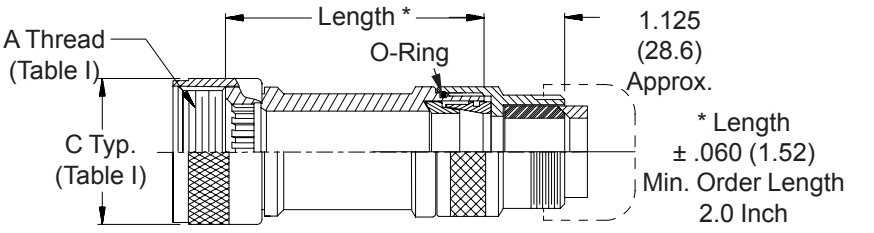

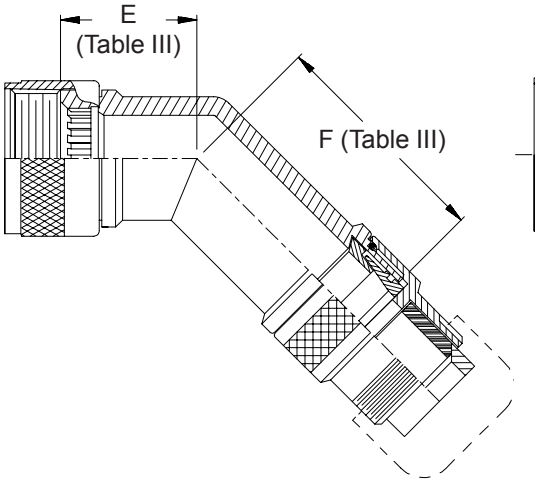

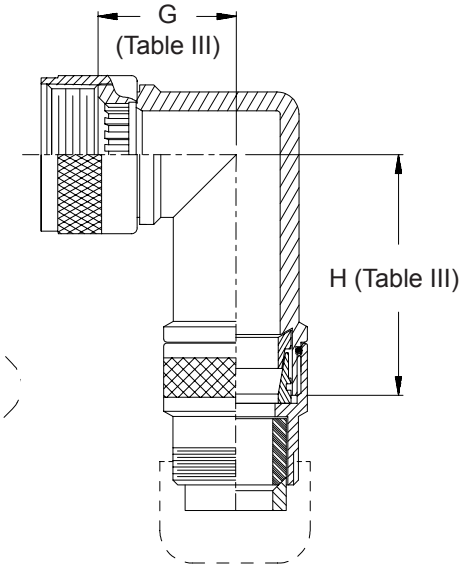

STYLE H
Heavy Duty
(Table X)

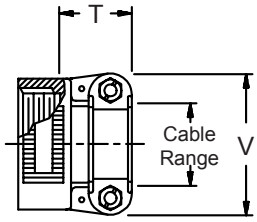

STYLE A
Medium Duty
(Table XI)

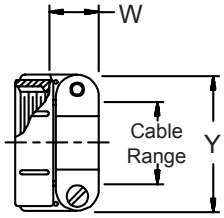

STYLE M
Medium Duty
(Table XI)

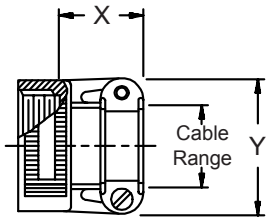

STYLE D
Medium Duty
(Table XI)

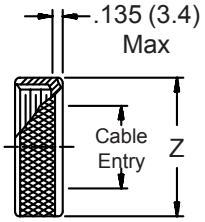

© 2005 Glenair, Inc.

TABLE III: ELBOW DIMENSIONS

Shell Size	E Max	F Max	G Max	H Max
11	1.240 (31.5)	2.060 (52.3)	1.380 (35.1)	2.200 (55.9)
13	1.260 (32.0)	2.080 (52.8)	1.440 (36.6)	2.260 (57.4)
15	1.290 (32.8)	2.360 (59.9)	1.500 (38.1)	2.580 (65.5)
17	1.310 (33.3)	2.380 (60.5)	1.570 (39.9)	2.640 (67.1)
19	1.340 (34.0)	2.500 (63.5)	1.630 (41.4)	2.810 (71.4)
23	1.380 (35.1)	2.540 (64.5)	1.730 (43.9)	2.890 (73.4)
25	1.410 (35.8)	2.570 (65.3)	1.800 (45.7)	2.960 (75.2)
29	1.580 (40.1)	2.800 (71.1)	2.040 (51.8)	3.260 (82.8)
33	1.620 (41.1)	2.820 (71.6)	2.130 (54.1)	3.330 (84.6)

See inside back cover fold-out or pages 13 and 14 for Tables I and II.

TABLE X: CABLE ENTRY

Dash No.	T Max	V Max	Cable Range Min	Cable Range Max
04	.780 (19.8)	.957 (24.3)	.125 (3.2)	.312 (7.9)
06	.780 (19.8)	1.145 (29.1)	.250 (6.4)	.437 (11.1)
08	.780 (19.8)	1.332 (33.8)	.387 (9.8)	.562 (14.3)
10	.780 (19.8)	1.332 (33.8)	.350 (8.9)	.625 (15.9)
12	.811 (20.6)	1.551 (39.4)	.500 (12.7)	.750 (19.1)
16	.905 (23.0)	1.770 (45.0)	.625 (15.9)	.937 (23.8)
20	1.092 (27.7)	2.113 (53.7)	.875 (22.2)	1.250 (31.8)
24	1.124 (28.5)	2.363 (60.0)	1.000 (25.4)	1.375 (34.9)
28	1.399 (35.5)	2.770 (70.4)	1.250 (31.8)	1.625 (41.3)
32	1.399 (35.5)	3.020 (76.7)	1.437 (36.5)	1.875 (47.6)

1. When maximum cable entry (page 21) is exceeded, Style 2 will be supplied. Dimensions E, F, G and H will not apply. Please consult factory.
2. Metric dimensions (mm) are indicated in parentheses.
3. Cable range is defined as the accommodations range for the wire bundle or cable. Dimensions shown are not intended for inspection criteria.
4. Consult factory for shorter lengths on straight backshells.

TABLE XI: CABLE ENTRY

Dash No.	W Max	X Max	Y Max	Z Max	Cable Range Min **	Cable Range Max
03*	.437 (11.1)	.760 (19.3)	.843 (21.4)	.630 (16.0)	.156 (4.0)	.250 (6.4)
04*	.437 (11.1)	.760 (19.3)	.906 (23.0)	.755 (19.2)	.188 (4.8)	.312 (7.9)
06*	.500 (12.7)	.760 (19.3)	1.093 (27.8)	.942 (23.9)	.281 (7.1)	.438 (11.1)
08	.563 (14.3)	.760 (19.3)	1.187 (30.1)	1.067 (27.1)	.387 (9.8)	.562 (14.3)
10	.563 (14.3)	.760 (19.3)	1.281 (32.5)	1.192 (30.3)	.375 (9.5)	.625 (15.9)
12	.563 (14.3)	.760 (19.3)	1.500 (38.1)	1.380 (35.1)	.438 (11.1)	.750 (19.1)
16	.656 (16.7)	1.073 (27.3)	1.719 (43.7)	1.535 (39.0)	.625 (15.9)	.938 (23.8)
20	.656 (16.7)	1.323 (33.6)	2.062 (52.4)	1.848 (46.9)	.875 (22.2)	1.250 (31.8)
24	.656 (16.7)	1.323 (33.6)	2.312 (58.7)	2.255 (57.3)	1.000 (25.4)	1.375 (34.9)
28	1.188 (30.2)	1.572 (39.9)	2.719 (69.1)	2.505 (63.6)	1.250 (31.8)	1.625 (41.3)
32*	1.187 (30.1)	1.572 (39.9)	2.969 (75.4)	2.755 (70.0)	1.437 (36.5)	1.875 (47.6)
40*	1.125 (28.6)	1.572 (39.9)	3.531 (89.7)	3.255 (82.7)	1.875 (47.6)	2.375 (60.3)

* Not available in Style M clamp.

** Not Applicable Style D

-445 **Add "-445" to Specify Glenair's Non-Detent, ("NESTOR") Spring-Loaded, Self-Locking Coupling. See Page 41 for Details.**

© 2005 Glenair, Inc.