This document was generated on 05/21/2010

PLEASE CHECK WWW.MOLEX.COM FOR LATEST PART INFORMATION

Part Number: 0039307051
Status: Active
Overview: minifit_jr
Description: 4.20mm (.165") Pitch Mini-Fit Jr.™ Header, Single Row, Right Angle, with Snap-in Plastic Peg PCB Lock, 5 Circuits, PA Polyamide Nylon 6/6, 94V-2, Tin (Sn) Over Nickel (Ni) Plating

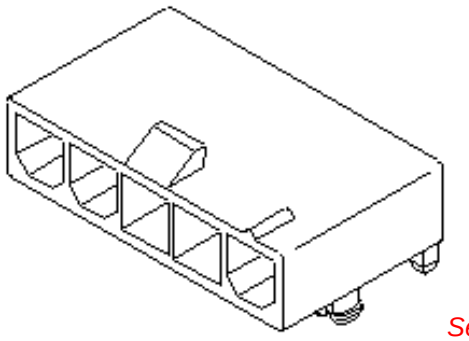

Series image - Reference only

Documents:

- 3D Model
- Drawing (PDF)
- Product Specification PS-5556-001 (PDF)
- RoHS Certificate of Compliance (PDF)

Agency Certification

CSA	LR19980
TUV	R72081037
UL	E29179

General

Product Family	PCB Headers
Series	5569
Application	Wire-to-Board
Comments	Current = 13A max. per circuit when header is mated to a receptacle loaded with 45750 Mini-Fit Plus HCS™ Crimp Terminal Crimpted to to 16 AWG wire. . See Molex Product specification PS-5556-001 for additional current de-rating information.
Overview	minifit_jr
Product Name	Mini-Fit Jr.™

Physical

Breakaway	No
Circuits (Loaded)	5
Circuits (maximum)	5
Circuits Detail	5
Color - Resin	Natural
Durability (mating cycles max)	30
First Mate / Last Break	No
Flammability	94V-2
Glow-Wire Compliant	No
Guide to Mating Part	No
Keying to Mating Part	None
Lock to Mating Part	Yes
Material - Metal	Brass
Material - Plating Mating	Tin
Material - Plating Termination	Tin
Material - Resin	Nylon
Number of Rows	1
Orientation	Right Angle
PCB Locator	Yes
PCB Retention	Yes
PCB Thickness Recommended (in)	0.070 In
PCB Thickness Recommended (mm)	1.78 mm
Packaging Type	Bag
Pitch - Mating Interface (in)	0.165 In
Pitch - Mating Interface (mm)	4.20 mm
Pitch - Term. Interface (in)	0.165 In
Pitch - Term. Interface (mm)	4.20 mm

EU RoHS
ELV and RoHS Compliant
REACH SVHC
Contains SVHC: No
Halogen-Free Status
Not Reviewed

China RoHS

Need more information on product environmental compliance?

Email productcompliance@molex.com
For a multiple part number RoHS Certificate of Compliance, click here

Please visit the Contact Us section for any non-product compliance questions.

Search Parts in this Series
5569Series

Mates With
39-01-4050 Receptacle

Plating min: Mating (µin)	100
Plating min: Mating (µm)	2.54
Plating min: Termination (µin)	100
Plating min: Termination (µm)	2.54
Polarized to Mating Part	Yes
Polarized to PCB	Yes
Shrouded	Fully
Stackable	No
Surface Mount Compatible (SMC)	No
Temperature Range - Operating	-40°C to +105°C
Termination Interface: Style	Through Hole

Electrical

Current - Maximum per Contact	13A
Voltage - Maximum	600V

Solder Process Data

Duration at Max. Process Temperature (seconds)	5
Lead-free Process Capability	Wave Capable (TH only)
Max. Cycles at Max. Process Temperature	1
Process Temperature max. C	240

Material Info

Old Part Number	5569-05A4S

Reference - Drawing Numbers

Packaging Specification	PK-5569-002
Product Specification	PS-5556-001
Sales Drawing	SDA-5569-NL*
Test Summary	TS-5556-002

CKT SIZE	DIM A	DIM B	DIM C	DIM D
4	.496 (12.60)	.709 (18.00)	.850 (21.60)	1.102 (28.00)
5	.661 (16.80)	.874 (22.20)	1.016 (25.80)	1.268 (32.20)
6	.827 (21.00)	1.039 (26.40)	1.181 (30.00)	1.433 (36.40)
7	.992 (25.20)	1.205 (30.60)	1.346 (34.20)	1.598 (40.60)
8	1.157 (29.40)	1.370 (34.80)	1.512 (38.40)	1.764 (44.80)
9	1.323 (33.60)	1.535 (39.00)	1.677 (42.60)	1.929 (49.00)
10	1.488 (37.80)	1.701 (43.20)	1.843 (46.80)	2.094 (53.20)
11	1.654 (42.00)	1.866 (47.40)	2.008 (51.00)	2.260 (57.40)
12	1.819 (46.20)	2.031 (51.60)	2.173 (55.20)	2.425 (61.60)

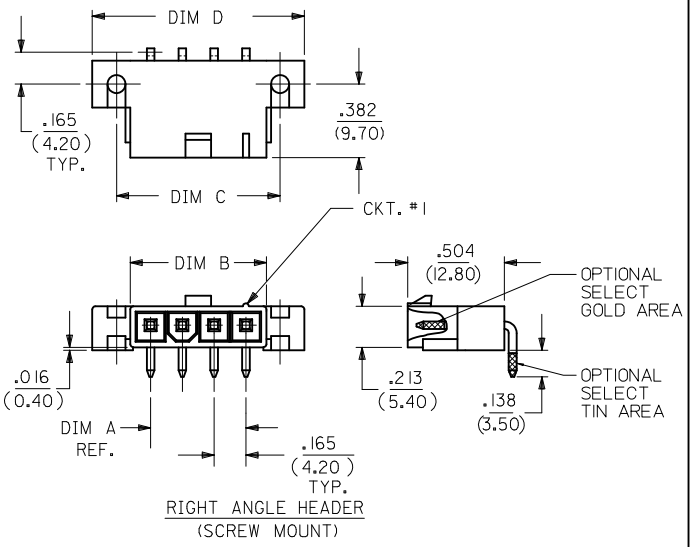

RIGHT ANGLE HEADER
(SCREW MOUNT)

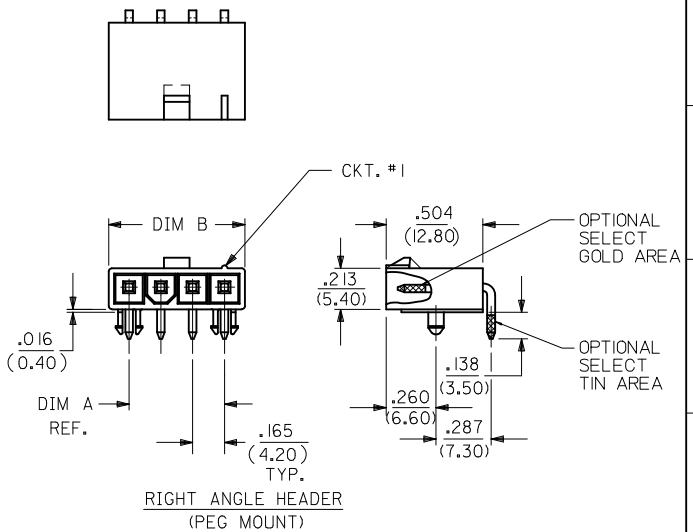

RIGHT ANGLE HEADER
(PEG MOUNT)

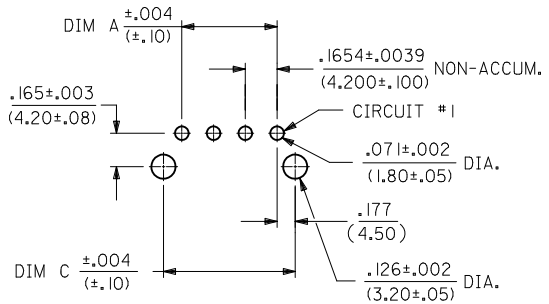

RECOMMENDED HOLE LAYOUT FOR
.070/(1.78) MAX. THICK P.C. BOARD
VIEWED FROM COMPONENT SIDE

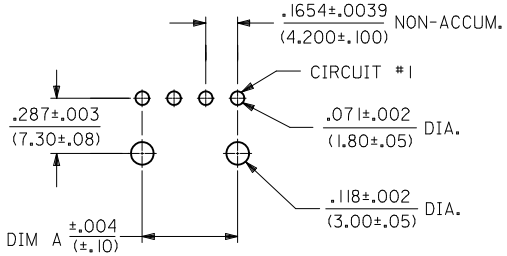

RECOMMENDED HOLE LAYOUT FOR
.070/(1.78) MAX. THICK P.C. BOARD
VIEWED FROM COMPONENT SIDE

LEGEND:

5569 - ** A * * - *

- CKT. SIZE (04-12)
- ASSEMBLY
- MOUNTING & LOCK OPTION:
  - 3 = SCREW MOUNT, POSITIVE LOCK
  - 4 = PEG MOUNT, POSITIVE LOCK
  - 5 = PEG MOUNT, PASSIVE LOCK
- PLATING OPTION: (SEE NOTE 2)
- MATERIAL OPTION: (SEE NOTE 1)

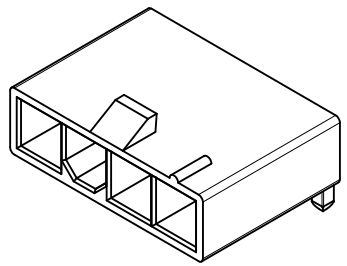

NOTES:

1) HOUSING MATERIAL:
   "BLANK" = NYLON 6/6, U.L. 94V-2, COLOR: NATURAL.
   210 = NYLON 6/6, U.L. 94V-0, COLOR: NATURAL.
   BL = NYLON 6/6, U.L. 94V-2, COLOR: BLACK.
   400 = NYLON 6/6, U.L. 94V-0. COLOR: BLACK.
   TERMINAL MATERIAL: BRASS, ALLOY 260.
2) TERMINAL PLATING:
   "BLANK" - .000200/(.00508) MIN. TIN OVER .000100/(.00254) MIN. COPPER OVERALL.
   G - .000030/(.00076) MIN. GOLD OVER .000050/(.00127) MIN. NICKEL OVERALL.
   GS - .000030/(.00076) MIN. SELECT GOLD AND .000100/(.00127) MIN. SELECT MATTE TIN OVER .000050/(.00127) MIN NICKEL OVERALL.
   G2 - .000015/(.00038) MIN. GOLD OVER .000030/(.00076) MIN. NICKEL OVERALL.
   GS2 - .00015/(.00038) MIN. SELECT GOLD AND .000100/(.00254) MIN. SELECT MATTE TIN OVER .000050/(.00127) MIN. NICKEL OVERALL.
   G3 - .000050/(.00127) MIN. GOLD OVER .000050/(.00127) MIN. NICKEL OVERALL.
   S - .000100/(.00254) MIN. BRIGHT TIN OVER .000050/(.00127) MIN. NICKEL OVERALL.
   GS - .000030/(.00076) MIN. SELECT GOLD, .000100/(.00254) MIN SELECT MATTE TIN OVER .000050/(.00127) MIN. NICKEL OVERALL.
   RM - .000060/(.00152) MIN REFLOWED MATTE TIN OVER .000050/(.00127) MIN. NICKEL OVERALL.
3) PRODUCT SPECIFICATION: PS-5556-001
4) PACKAGING SPECIFICATION : BULK PACK PER PK-5569-002
5) PART MATES WITH MOLEX RECEPTACLE #5557.
6) PART IS DESIGNED FOR USE WITH 4 - 40 OR M3 SCREWS.
7) DISCOLORATION IN THE BANDOLIER CARRIER AREA OF THE PIN IS INHERENT TO THE PLATING PROCESS AND IS DUE TO THE MASKING EFFECT OF THE CARRIER. THIS DISCOLORATION IS IN A NON-FUNCTIONAL AREA OF THE PIN AND WILL NOT AFFECT THE PERFORMANCE OF THE HEADER ASSEMBLY.
8) CONNECTORS ARE NOT TO BE MATED OR UNMATED WHILE CIRCUIT ARE LIVE.
9) PARTS NOT DESIGNED FOR CURRENT SHARING.
10) PART CONFORMS TO CLASS "B" REQUIREMENTS OF COSMETIC SPECIFICATION PS-45499-002.

REV	DESCRIPTION	DRWN	CHK'D	APPR
P5	ADDED RM OPTION EC NO: UCP2010-2882	JAGUILAR 2010/05/13	JBELL 2010/05/17	FSMITH 2010/05/26

QUALITY SYMBOLS: E=0, F=0, P=0

GENERAL TOLERANCES (UNLESS SPECIFIED)

	mm	INCH
4 PLACES	± ---	± ---
3 PLACES	± ---	± .015
2 PLACES	± .38	± ---
1 PLACE	± ---	± ---
ANGULAR ± 3 °		

DRAFT WHERE APPLICABLE MUST REMAIN WITHIN DIMENSIONS

DIMENSION STYLE	IN/MM
SCALE	2:1
DESIGN UNITS	METRIC
	THIRD ANGLE PROJECTION
DRAWN BY / DATE	KSS 2/14/89
CHECKED BY / DATE	RJF 2/14/89
APPROVED BY / DATE	RAS 2/14/89
MATERIAL NO.	SEE CHARTS
SIZE	C

TITLE: RIGHT ANGLE HEADER ASSY (SINGLE ROW) (MINI-FIT JR. SERIES)

molex MOLEX INCORPORATED

DOCUMENT NO. SDA-5569-NL*

SHEET NO. 1 OF 4

THIS DRAWING CONTAINS INFORMATION THAT IS PROPRIETARY TO MOLEX INCORPORATED AND SHOULD NOT BE USED WITHOUT WRITTEN PERMISSION

E.D.P. NO.	ENG. NO.	CKT. SIZE	MOUNTING OPTION	LOCK OPTION	PLATING (SEE NOTE 2)	MAT'L. (SEE NOTE 1)
39-30-3041	5569-04A3	4	SCREWS	POSITIVE	TIN/COPPER	94V-2
39-30-3051	5569-05A3	5	SCREWS	POSITIVE	TIN/COPPER	94V-2
39-30-3061	5569-06A3	6	SCREWS	POSITIVE	TIN/COPPER	94V-2
39-30-3071	5569-07A3	7	SCREWS	POSITIVE	TIN/COPPER	94V-2
39-30-3081	5569-08A3	8	SCREWS	POSITIVE	TIN/COPPER	94V-2
39-30-3091	5569-09A3	9	SCREWS	POSITIVE	TIN/COPPER	94V-2
39-30-3101	5569-10A3	10	SCREWS	POSITIVE	TIN/COPPER	94V-2
39-30-3111	5569-11A3	11	SCREWS	POSITIVE	TIN/COPPER	94V-2
39-30-3121	5569-12A3	12	SCREWS	POSITIVE	TIN/COPPER	94V-2
39-30-3042	5569-04A3-210	4	SCREWS	POSITIVE	TIN/COPPER	94V-0
39-30-3052	5569-05A3-210	5	SCREWS	POSITIVE	TIN/COPPER	94V-0
39-30-3062	5569-06A3-210	6	SCREWS	POSITIVE	TIN/COPPER	94V-0
39-30-3072	5569-07A3-210	7	SCREWS	POSITIVE	TIN/COPPER	94V-0
39-30-3082	5569-08A3-210	8	SCREWS	POSITIVE	TIN/COPPER	94V-0
39-30-3092	5569-09A3-210	9	SCREWS	POSITIVE	TIN/COPPER	94V-0
39-30-3102	5569-10A3-210	10	SCREWS	POSITIVE	TIN/COPPER	94V-0
39-30-3112	5569-11A3-210	11	SCREWS	POSITIVE	TIN/COPPER	94V-0
39-30-3122	5569-12A3-210	12	SCREWS	POSITIVE	TIN/COPPER	94V-0
39-30-3045	5569-04A4	4	PEGS	POSITIVE	TIN/COPPER	94V-2
39-30-3055	5569-05A4	5	PEGS	POSITIVE	TIN/COPPER	94V-2
39-30-3065	5569-06A4	6	PEGS	POSITIVE	TIN/COPPER	94V-2
39-30-3075	5569-07A4	7	PEGS	POSITIVE	TIN/COPPER	94V-2
39-30-3085	5569-08A4	8	PEGS	POSITIVE	TIN/COPPER	94V-2
39-30-3095	5569-09A4	9	PEGS	POSITIVE	TIN/COPPER	94V-2
39-30-3105	5569-10A4	10	PEGS	POSITIVE	TIN/COPPER	94V-2
39-30-3115	5569-11A4	11	PEGS	POSITIVE	TIN/COPPER	94V-2
39-30-3125	5569-12A4	12	PEGS	POSITIVE	TIN/COPPER	94V-2
39-30-3046	5569-04A4-210	4	PEGS	POSITIVE	TIN/COPPER	94V-0
39-30-3056	5569-05A4-210	5	PEGS	POSITIVE	TIN/COPPER	94V-0
39-30-3066	5569-06A4-210	6	PEGS	POSITIVE	TIN/COPPER	94V-0
39-30-3076	5569-07A4-210	7	PEGS	POSITIVE	TIN/COPPER	94V-0
39-30-3086	5569-08A4-210	8	PEGS	POSITIVE	TIN/COPPER	94V-0
39-30-3096	5569-09A4-210	9	PEGS	POSITIVE	TIN/COPPER	94V-0
39-30-3106	5569-10A4-210	10	PEGS	POSITIVE	TIN/COPPER	94V-0
39-30-3116	5569-11A4-210	11	PEGS	POSITIVE	TIN/COPPER	94V-0
39-30-3126	5569-12A4-210	12	PEGS	POSITIVE	TIN/COPPER	94V-0
39-30-3047	5569-04A4G	4	PEGS	POSITIVE	30 GOLD	94V-2
39-30-3057	5569-05A4G	5	PEGS	POSITIVE	30 GOLD	94V-2
39-30-3067	5569-06A4G	6	PEGS	POSITIVE	30 GOLD	94V-2
39-30-3077	5569-07A4G	7	PEGS	POSITIVE	30 GOLD	94V-2
39-30-3087	5569-08A4G	8	PEGS	POSITIVE	30 GOLD	94V-2
39-30-3097	5569-09A4G	9	PEGS	POSITIVE	30 GOLD	94V-2
39-30-3107	5569-10A4G	10	PEGS	POSITIVE	30 GOLD	94V-2
39-30-3117	5569-11A4G	11	PEGS	POSITIVE	30 GOLD	94V-2
39-30-3127	5569-12A4G	12	PEGS	POSITIVE	30 GOLD	94V-2
39-30-3048	5569-04A4G-210	4	PEGS	POSITIVE	30 GOLD	94V-0
39-30-3058	5569-05A4G-210	5	PEGS	POSITIVE	30 GOLD	94V-0
39-30-3068	5569-06A4G-210	6	PEGS	POSITIVE	30 GOLD	94V-0
39-30-3078	5569-07A4G-210	7	PEGS	POSITIVE	30 GOLD	94V-0
39-30-3088	5569-08A4G-210	8	PEGS	POSITIVE	30 GOLD	94V-0
39-30-3098	5569-09A4G-210	9	PEGS	POSITIVE	30 GOLD	94V-0
39-30-3108	5569-10A4G-210	10	PEGS	POSITIVE	30 GOLD	94V-0
39-30-3118	5569-11A4G-210	11	PEGS	POSITIVE	30 GOLD	94V-0
39-30-3128	5569-12A4G-210	12	PEGS	POSITIVE	30 GOLD	94V-0

E.D.P. NO.	ENG. NO.	CKT. SIZE	MOUNTING OPTION	LOCK OPTION	PLATING (SEE NOTE 2)	MAT'L. (SEE NOTE 1)
39-30-3049	5569-04A4G2	4	PEGS	POSITIVE	15 GOLD	94V-2
39-30-3059	5569-05A4G2	5	PEGS	POSITIVE	15 GOLD	94V-2
39-30-3069	5569-06A4G2	6	PEGS	POSITIVE	15 GOLD	94V-2
39-30-3079	5569-07A4G2	7	PEGS	POSITIVE	15 GOLD	94V-2
39-30-3089	5569-08A4G2	8	PEGS	POSITIVE	15 GOLD	94V-2
39-30-3099	5569-09A4G2	9	PEGS	POSITIVE	15 GOLD	94V-2
39-30-3109	5569-10A4G2	10	PEGS	POSITIVE	15 GOLD	94V-2
39-30-3119	5569-11A4G2	11	PEGS	POSITIVE	15 GOLD	94V-2
39-30-3129	5569-12A4G2	12	PEGS	POSITIVE	15 GOLD	94V-2
39-30-4040	5569-04A4G2-210	4	PEGS	POSITIVE	15 GOLD	94V-0
39-30-4050	5569-05A4G2-210	5	PEGS	POSITIVE	15 GOLD	94V-0
39-30-4060	5569-06A4G2-210	6	PEGS	POSITIVE	15 GOLD	94V-0
39-30-4070	5569-07A4G2-210	7	PEGS	POSITIVE	15 GOLD	94V-0
39-30-4080	5569-08A4G2-210	8	PEGS	POSITIVE	15 GOLD	94V-0
39-30-4090	5569-09A4G2-210	9	PEGS	POSITIVE	15 GOLD	94V-0
39-30-4100	5569-10A4G2-210	10	PEGS	POSITIVE	15 GOLD	94V-0
39-30-4110	5569-11A4G2-210	11	PEGS	POSITIVE	15 GOLD	94V-0
39-30-4120	5569-12A4G2-210	12	PEGS	POSITIVE	15 GOLD	94V-0
39-30-3043	5569-04A3G	4	SCREWS	POSITIVE	30 GOLD	94V-2
39-30-3053	5569-05A3G	5	SCREWS	POSITIVE	30 GOLD	94V-2
39-30-3063	5569-06A3G	6	SCREWS	POSITIVE	30 GOLD	94V-2
39-30-3073	5569-07A3G	7	SCREWS	POSITIVE	30 GOLD	94V-2
39-30-3083	5569-08A3G	8	SCREWS	POSITIVE	30 GOLD	94V-2
39-30-3093	5569-09A3G	9	SCREWS	POSITIVE	30 GOLD	94V-2
39-30-3103	5569-10A3G	10	SCREWS	POSITIVE	30 GOLD	94V-2
39-30-3113	5569-11A3G	11	SCREWS	POSITIVE	30 GOLD	94V-2
39-30-3123	5569-12A3G	12	SCREWS	POSITIVE	30 GOLD	94V-2
39-30-7041	5569-04A4S	4	PEGS	POSITIVE	TIN/NICKEL	94V-2
39-30-7051	5569-05A4S	5	PEGS	POSITIVE	TIN/NICKEL	94V-2
39-30-7061	5569-06A4S	6	PEGS	POSITIVE	TIN/NICKEL	94V-2
39-30-7071	5569-07A4S	7	PEGS	POSITIVE	TIN/NICKEL	94V-2
39-30-7081	5569-08A4S	8	PEGS	POSITIVE	TIN/NICKEL	94V-2
39-30-7091	5569-09A4S	9	PEGS	POSITIVE	TIN/NICKEL	94V-2
39-30-7101	5569-10A4S	10	PEGS	POSITIVE	TIN/NICKEL	94V-2
39-30-7111	5569-11A4S	11	PEGS	POSITIVE	TIN/NICKEL	94V-2
39-30-7121	5569-12A4S	12	PEGS	POSITIVE	TIN/NICKEL	94V-2
39-30-7042	5569-04A4S-210	4	PEGS	POSITIVE	TIN/NICKEL	94V-0
39-30-7052	5569-05A4S-210	5	PEGS	POSITIVE	TIN/NICKEL	94V-0
39-30-7062	5569-06A4S-210	6	PEGS	POSITIVE	TIN/NICKEL	94V-0
39-30-7072	5569-07A4S-210	7	PEGS	POSITIVE	TIN/NICKEL	94V-0
39-30-7082	5569-08A4S-210	8	PEGS	POSITIVE	TIN/NICKEL	94V-0
39-30-7092	5569-09A4S-210	9	PEGS	POSITIVE	TIN/NICKEL	94V-0
39-30-7102	5569-10A4S-210	10	PEGS	POSITIVE	TIN/NICKEL	94V-0
39-30-7112	5569-11A4S-210	11	PEGS	POSITIVE	TIN/NICKEL	94V-0
39-30-7122	5569-12A4S-210	12	PEGS	POSITIVE	TIN/NICKEL	94V-0
50-34-8578	5569-04A4RM-210	4	PEGS	POSITIVE	REFLOW/NICKEL	94V-0
50-34-8579	5569-05A4RM-210	5	PEGS	POSITIVE	REFLOW/NICKEL	94V-0

SEE SHEET 1
EC NO: UCP2010-2882 2010/05/13
DRWN: JJAGUILAR 2010/05/17
CH'KD: JBELL 2010/05/26
APPR: FSMITH
DESCRIPTION
P5
REV

QUALITY SYMBOLS

GENERAL TOLERANCES (UNLESS SPECIFIED)

	mm	INCH
4 PLACES	± ---	± ---
3 PLACES	± ---	± .015
2 PLACES	± .38	± ---
1 PLACE	± ---	± ---
ANGULAR ± 3 °		

DRAFT WHERE APPLICABLE MUST REMAIN WITHIN DIMENSIONS

DIMENSION STYLE: IN/MM
SCALE
DESIGN UNITS: METRIC
THIRD ANGLE PROJECTION

DRAWN BY: KSS DATE: 2/14/89
CHECKED BY: RJF DATE: 2/14/89
APPROVED BY: RAS DATE: 2/14/89

TITLE: RIGHT ANGLE HEADER ASSY (SINGLE ROW) (MINI-FIT JR. SERIES)

MOLEX INCORPORATED

MATERIAL NO.: SEE TABLE
DOCUMENT NO.: SDA-5569-NL*
SHEET NO.: 2 OF 4

SIZE: C

THIS DRAWING CONTAINS INFORMATION THAT IS PROPRIETARY TO MOLEX INCORPORATED AND SHOULD NOT BE USED WITHOUT WRITTEN PERMISSION

E.D.P. NO.	ENG. NO.	CKT. SIZE	MOUNTING OPTION	LOCK OPTION	PLATING (SEE NOTE 2)	MAT'L. (SEE NOTE 1)
NO E.D.P.	5569-04A5	4	PEGS	PASSIVE	TIN/COPPER	94V-2
15-24-1501	5569-05A5	5	PEGS	PASSIVE	TIN/COPPER	94V-2
NO E.D.P.	5569-06A5	6	PEGS	PASSIVE	TIN/COPPER	94V-2
NO E.D.P.	5569-07A5	7	PEGS	PASSIVE	TIN/COPPER	94V-2
NO E.D.P.	5569-08A5	8	PEGS	PASSIVE	TIN/COPPER	94V-2
NO E.D.P.	5569-09A5	9	PEGS	PASSIVE	TIN/COPPER	94V-2
NO E.D.P.	5569-10A5	10	PEGS	PASSIVE	TIN/COPPER	94V-2
NO E.D.P.	5569-11A5	11	PEGS	PASSIVE	TIN/COPPER	94V-2
NO E.D.P.	5569-12A5	12	PEGS	PASSIVE	TIN/COPPER	94V-2
NO E.D.P.	5569-04A5-210	4	PEGS	PASSIVE	TIN/COPPER	94V-0
15-24-1503	5569-05A5-210	5	PEGS	PASSIVE	TIN/COPPER	94V-0
NO E.D.P.	5569-06A5-210	6	PEGS	PASSIVE	TIN/COPPER	94V-0
NO E.D.P.	5569-07A5-210	7	PEGS	PASSIVE	TIN/COPPER	94V-0
NO E.D.P.	5569-08A5-210	8	PEGS	PASSIVE	TIN/COPPER	94V-0
NO E.D.P.	5569-09A5-210	9	PEGS	PASSIVE	TIN/COPPER	94V-0
NO E.D.P.	5569-10A5-210	10	PEGS	PASSIVE	TIN/COPPER	94V-0
NO E.D.P.	5569-11A5-210	11	PEGS	PASSIVE	TIN/COPPER	94V-0
NO E.D.P.	5569-12A5-210	12	PEGS	PASSIVE	TIN/COPPER	94V-0
NO E.D.P.	5569-04A5G2	4	PEGS	PASSIVE	15 GOLD	94V-2
15-27-1501	5569-05A5G2	5	PEGS	PASSIVE	15 GOLD	94V-2
NO E.D.P.	5569-06A5G2	6	PEGS	PASSIVE	15 GOLD	94V-2
NO E.D.P.	5569-07A5G2	7	PEGS	PASSIVE	15 GOLD	94V-2
NO E.D.P.	5569-08A5G2	8	PEGS	PASSIVE	15 GOLD	94V-2
NO E.D.P.	5569-09A5G2	9	PEGS	PASSIVE	15 GOLD	94V-2
NO E.D.P.	5569-10A5G2	10	PEGS	PASSIVE	15 GOLD	94V-2
NO E.D.P.	5569-11A5G2	11	PEGS	PASSIVE	15 GOLD	94V-2
NO E.D.P.	5569-12A5G2	12	PEGS	PASSIVE	15 GOLD	94V-2
39-31-1042	5569-04A4-BL	4	PEGS	POSITIVE	TIN/COPPER	94V-2 BLACK
39-31-1052	5569-05A4-BL	5	PEGS	POSITIVE	TIN/COPPER	94V-2 BLACK
39-31-1062	5569-06A4-BL	6	PEGS	POSITIVE	TIN/COPPER	94V-2 BLACK
39-31-1072	5569-07A4-BL	7	PEGS	POSITIVE	TIN/COPPER	94V-2 BLACK
39-31-1082	5569-08A4-BL	8	PEGS	POSITIVE	TIN/COPPER	94V-2 BLACK
39-31-1092	5569-09A4-BL	9	PEGS	POSITIVE	TIN/COPPER	94V-2 BLACK
39-31-1102	5569-10A4-BL	10	PEGS	POSITIVE	TIN/COPPER	94V-2 BLACK
39-31-1112	5569-11A4-BL	11	PEGS	POSITIVE	TIN/COPPER	94V-2 BLACK
39-31-1122	5569-12A4-BL	12	PEGS	POSITIVE	TIN/COPPER	94V-2 BLACK
39-30-6049	5569-04A3S	4	SCREWS	POSITIVE	TIN/NICKEL	94V-2
NO E.D.P.	5569-05A3S	5	SCREWS	POSITIVE	TIN/NICKEL	94V-2
NO E.D.P.	5569-06A3S	6	SCREWS	POSITIVE	TIN/NICKEL	94V-2
NO E.D.P.	5569-07A3S	7	SCREWS	POSITIVE	TIN/NICKEL	94V-2
NO E.D.P.	5569-08A3S	8	SCREWS	POSITIVE	TIN/NICKEL	94V-2
NO E.D.P.	5569-09A3S	9	SCREWS	POSITIVE	TIN/NICKEL	94V-2
NO E.D.P.	5569-10A3S	10	SCREWS	POSITIVE	TIN/NICKEL	94V-2
NO E.D.P.	5569-11A3S	11	SCREWS	POSITIVE	TIN/NICKEL	94V-2
NO E.D.P.	5569-12A3S	12	SCREWS	POSITIVE	TIN/NICKEL	94V-2

E.D.P. NO.	ENG. NO.	CKT. SIZE	MOUNTING OPTION	LOCK OPTION	PLATING (SEE NOTE 2)	MAT'L. (SEE NOTE 1)
NO E.D.P.	5569-04A4GS-400	4	PEG	POSITIVE	30 GOLD	94V-0
50-30-4436	5569-05A4GS-400	5	PEG	POSITIVE	30 GOLD	94V-0
NO E.D.P.	5569-06A4GS-400	6	PEG	POSITIVE	30 GOLD	94V-0
NO E.D.P.	5569-07A4GS-400	7	PEG	POSITIVE	30 GOLD	94V-0
NO E.D.P.	5569-08A4GS-400	8	PEG	POSITIVE	30 GOLD	94V-0
NO E.D.P.	5569-09A4GS-400	9	PEG	POSITIVE	30 GOLD	94V-0
NO E.D.P.	5569-10A4GS-400	10	PEG	POSITIVE	30 GOLD	94V-0
NO E.D.P.	5569-11A4GS-400	11	PEG	POSITIVE	30 GOLD	94V-0
NO E.D.P.	5569-12A4GS-400	12	PEG	POSITIVE	30 GOLD	94V-0
50-30-4438	5569-04A4GS	4	PEG	POSITIVE	30 GOLD	94V-2
50-30-4439	5569-05A4GS	5	PEG	POSITIVE	30 GOLD	94V-2
NO E.D.P.	5569-06A4GS	6	PEG	POSITIVE	30 GOLD	94V-2
NO E.D.P.	5569-07A4GS	7	PEG	POSITIVE	30 GOLD	94V-2
NO E.D.P.	5569-08A4GS	8	PEG	POSITIVE	30 GOLD	94V-2
NO E.D.P.	5569-09A4GS	9	PEG	POSITIVE	30 GOLD	94V-2
NO E.D.P.	5569-10A4GS	10	PEG	POSITIVE	30 GOLD	94V-2
NO E.D.P.	5569-11A4GS	11	PEG	POSITIVE	30 GOLD	94V-2
NO E.D.P.	5569-12A4GS	12	PEG	POSITIVE	30 GOLD	94V-2
50-30-4441	5569-04A4GS-210	4	PEG	POSITIVE	30 GOLD	94V-0
50-30-4442	5569-05A4GS-210	5	PEG	POSITIVE	30 GOLD	94V-0
NO E.D.P.	5569-06A4GS-210	6	PEG	POSITIVE	30 GOLD	94V-0
NO E.D.P.	5569-07A4GS-210	7	PEG	POSITIVE	30 GOLD	94V-0
NO E.D.P.	5569-08A4GS-210	8	PEG	POSITIVE	30 GOLD	94V-0
NO E.D.P.	5569-09A4GS-210	9	PEG	POSITIVE	30 GOLD	94V-0
NO E.D.P.	5569-10A4GS-210	10	PEG	POSITIVE	30 GOLD	94V-0
NO E.D.P.	5569-11A4GS-210	11	PEG	POSITIVE	30 GOLD	94V-0
NO E.D.P.	5569-12A4GS-210	12	PEG	POSITIVE	30 GOLD	94V-0
50-30-4443	5569-04A3GS	4	SCREW	POSITIVE	30 GOLD	94V-2
NO E.D.P.	5569-05A3GS	5	SCREW	POSITIVE	30 GOLD	94V-2
NO E.D.P.	5569-06A3GS	6	SCREW	POSITIVE	30 GOLD	94V-2
NO E.D.P.	5569-07A3GS	7	SCREW	POSITIVE	30 GOLD	94V-2
NO E.D.P.	5569-08A3GS	8	SCREW	POSITIVE	30 GOLD	94V-2
NO E.D.P.	5569-09A3GS	9	SCREW	POSITIVE	30 GOLD	94V-2
NO E.D.P.	5569-10A3GS	10	SCREW	POSITIVE	30 GOLD	94V-2
NO E.D.P.	5569-11A3GS	11	SCREW	POSITIVE	30 GOLD	94V-2
NO E.D.P.	5569-12A3GS	12	SCREW	POSITIVE	30 GOLD	94V-2
NO E.D.P.	5569-04A4-400	4	PEG	POSITIVE	TIN/COPPER	94V-2 BLACK
NO E.D.P.	5569-05A4-400	5	PEG	POSITIVE	TIN/COPPER	94V-2 BLACK
NO E.D.P.	5569-06A4-400	6	PEG	POSITIVE	TIN/COPPER	94V-2 BLACK
NO E.D.P.	5569-07A4-400	7	PEG	POSITIVE	TIN/COPPER	94V-2 BLACK
NO E.D.P.	5569-08A4-400	8	PEG	POSITIVE	TIN/COPPER	94V-2 BLACK
NO E.D.P.	5569-09A4-400	9	PEG	POSITIVE	TIN/COPPER	94V-2 BLACK
NO E.D.P.	5569-10A4-400	10	PEG	POSITIVE	TIN/COPPER	94V-2 BLACK
NO E.D.P.	5569-11A4-400	11	PEG	POSITIVE	TIN/COPPER	94V-2 BLACK
NO E.D.P.	5569-12A4-400	12	PEG	POSITIVE	TIN/COPPER	94V-2 BLACK

SEE SHEET 1
EC NO: UCP2010-2882 2010/05/13
DRWN: JAGUILAR 2010/05/17
CH'KD: JBELL 2010/05/26
APPR: FSMITH 2010/05/26
DESCRIPTION
P5
REV

QUALITY SYMBOLS

GENERAL TOLERANCES (UNLESS SPECIFIED)

	mm	INCH
4 PLACES	± ---	± ---
3 PLACES	± ---	± .015
2 PLACES	± .38	± ---
1 PLACE	± ---	± ---

ANGULAR ± 3 °

DRAFT WHERE APPLICABLE MUST REMAIN WITHIN DIMENSIONS

DIMENSION STYLE: IN/MM
SCALE
DESIGN UNITS: METRIC
THIRD ANGLE PROJECTION

DRAWN BY: KSS DATE: 2/14/89
CHECKED BY: RJF DATE: 2/14/89
APPROVED BY: RAS DATE: 2/14/89

TITLE: RIGHT ANGLE HEADER ASSY (SINGLE ROW) (MINI-FIT JR. SERIES)

MOLEX INCORPORATED

MATERIAL NO.: SEE CHARTS
DOCUMENT NO.: SDA-5569-NL*
SHEET NO.: 3 OF 4

SIZE: C

THIS DRAWING CONTAINS INFORMATION THAT IS PROPRIETARY TO MOLEX INCORPORATED AND SHOULD NOT BE USED WITHOUT WRITTEN PERMISSION

E.D.P. NO.	ENG. NO.	CKT. SIZE	MOUNTING OPTION	LOCK OPTION	PLATING (SEE NOTE 2)	MATERIAL (SEE NOTE 1)
50-30-4469	5569-04A3S-210	4	SCREW	POSITIVE	TIN/NICKEL	94V-2
NO E.D.P.	5569-05A3S-210	5	SCREW	POSITIVE	TIN/NICKEL	94V-2
NO E.D.P.	5569-06A3S-210	6	SCREW	POSITIVE	TIN/NICKEL	94V-2
NO E.D.P.	5569-07A3S-210	7	SCREW	POSITIVE	TIN/NICKEL	94V-2
NO E.D.P.	5569-08A3S-210	8	SCREW	POSITIVE	TIN/NICKEL	94V-2
NO E.D.P.	5569-09A3S-210	9	SCREW	POSITIVE	TIN/NICKEL	94V-2
NO E.D.P.	5569-10A3S-210	10	SCREW	POSITIVE	TIN/NICKEL	94V-2
NO E.D.P.	5569-11A3S-210	11	SCREW	POSITIVE	TIN/NICKEL	94V-2
NO E.D.P.	5569-12A3S-210	12	SCREW	POSITIVE	TIN/NICKEL	94V-2
NO E.D.P.	5569-04A3GS-210	4	SCREW	POSITIVE	30 GOLD	94V-0
NO E.D.P.	5569-05A3GS-210	5	SCREW	POSITIVE	30 GOLD	94V-0
NO E.D.P.	5569-06A3GS-210	6	SCREW	POSITIVE	30 GOLD	94V-0
NO E.D.P.	5569-07A3GS-210	7	SCREW	POSITIVE	30 GOLD	94V-0
NO E.D.P.	5569-08A3GS-210	8	SCREW	POSITIVE	30 GOLD	94V-0
NO E.D.P.	5569-09A3GS-210	9	SCREW	POSITIVE	30 GOLD	94V-0
NO E.D.P.	5569-10A3GS-210	10	SCREW	POSITIVE	30 GOLD	94V-0
NO E.D.P.	5569-11A3GS-210	11	SCREW	POSITIVE	30 GOLD	94V-0
NO E.D.P.	5569-12A3GS-210	12	SCREW	POSITIVE	30 GOLD	94V-0
NO E.D.P.	5569-04A5GS2	4	PEG	PASSIVE	15 GOLD	94V-2
26-01-3095	5569-05A5GS2	5	PEG	PASSIVE	15 GOLD	94V-2
NO E.D.P.	5569-06A5GS2	6	PEG	PASSIVE	15 GOLD	94V-2
NO E.D.P.	5569-07A5GS2	7	PEG	PASSIVE	15 GOLD	94V-2
NO E.D.P.	5569-08A5GS2	8	PEG	PASSIVE	15 GOLD	94V-2
NO E.D.P.	5569-09A5GS2	9	PEG	PASSIVE	15 GOLD	94V-2
NO E.D.P.	5569-10A5GS2	10	PEG	PASSIVE	15 GOLD	94V-2
NO E.D.P.	5569-11A5GS2	11	PEG	PASSIVE	15 GOLD	94V-2
NO E.D.P.	5569-12A5GS2	12	PEG	PASSIVE	15 GOLD	94V-2

E.D.P. NO.	ENG. NO.	CKT. SIZE	MOUNTING OPTION	LOCK OPTION	PLATING (SEE NOTE 2)	MATERIAL (SEE NOTE 1)

SEE SHEET 1
EC NO: UCP2010-2882 2010/05/13
DRWN: JJAGUILAR 2010/05/17
CH'KD: JBELL
APPR: FSMITH 2010/05/26
DESCRIPTION
P5
REV

QUALITY SYMBOLS
F =0
F =0
F =0

GENERAL TOLERANCES (UNLESS SPECIFIED)

	mm	INCH
4 PLACES	± ---	± ---
3 PLACES	± ---	± .015
2 PLACES	± .38	± ---
1 PLACE	± ---	± ---

ANGULAR ± 3 °

DRAFT WHERE APPLICABLE MUST REMAIN WITHIN DIMENSIONS

DIMENSION STYLE: IN/MM
SCALE
DESIGN UNITS: METRIC
THIRD ANGLE PROJECTION

DRAWN BY: KSS DATE: 2/14/89
CHECKED BY: RJF DATE: 2/14/89
APPROVED BY: RAS DATE: 2/14/89

TITLE: RIGHT ANGLE HEADER ASSY (SINGLE ROW) (MINI-FIT JR. SERIES)

molex MOLEX INCORPORATED

MATERIAL NO.: SEE TABLES
DOCUMENT NO.: SDA-5569-NL*
SHEET NO.: 4 OF 4

SIZE: C

THIS DRAWING CONTAINS INFORMATION THAT IS PROPRIETARY TO MOLEX INCORPORATED AND SHOULD NOT BE USED WITHOUT WRITTEN PERMISSION