This document was generated on 05/21/2010

PLEASE CHECK WWW.MOLEX.COM FOR LATEST PART INFORMATION

Part Number: 0039300060
Status: Active
Overview: minifit_jr
Description: 4.20mm (.165") Pitch Mini-Fit Jr.™ Header, Dual Row, Right Angle, with Snap-in Plastic Peg PCB Lock, 6 Circuits, PA Polyamide Nylon 6/6 94V-0, Tin (Sn) Plating

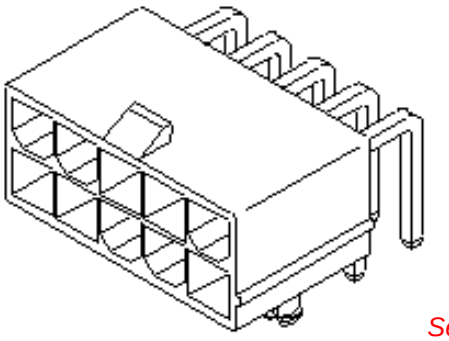

Series image - Reference only

Documents:

3D Model
Drawing (PDF)
Product Specification PS-5556-001 (PDF)
Product Specification PS-5557-045 (PDF)
RoHS Certificate of Compliance (PDF)

Agency Certification

CSA	LR19980
TUV	R72081037
UL	E29179

General

Product Family	PCB Headers
Series	5569
Application	Wire-to-Board
Comments	Current = 13A max. per circuit when header is mated to a receptacle loaded with 45750 Mini-Fit Plus HCS™ Crimp Terminal Crimpted to to 16 AWG wire. . See Molex Product specification PS-5556-001 for additional current de-rating information.
Overview	minifit_jr
Product Name	Mini-Fit Jr.™

Physical

Breakaway	No
Circuits (Loaded)	6
Circuits (maximum)	6
Circuits Detail	6
Color - Resin	Natural
Durability (mating cycles max)	30
First Mate / Last Break	No
Flammability	94V-0
Glow-Wire Compliant	No
Guide to Mating Part	No
Keying to Mating Part	None
Lock to Mating Part	Yes
Material - Metal	Brass
Material - Plating Mating	Tin
Material - Plating Termination	Tin
Material - Resin	Nylon
Number of Rows	2
Orientation	Right Angle
PCB Locator	Yes
PCB Retention	Yes
PCB Thickness Recommended (in)	0.070 In
PCB Thickness Recommended (mm)	1.78 mm
Packaging Type	Bag
Pitch - Mating Interface (in)	0.165 In
Pitch - Mating Interface (mm)	4.20 mm
Pitch - Term. Interface (in)	0.165 In
Pitch - Term. Interface (mm)	4.20 mm

EU RoHS
ELV and RoHS Compliant
REACH SVHC
Not Reviewed
Halogen-Free Status
Halogen-Free

China RoHS

Need more information on product environmental compliance?

Email productcompliance@molex.com
For a multiple part number RoHS Certificate of Compliance, click here

Please visit the Contact Us section for any non-product compliance questions.

Search Parts in this Series
5569Series

Mates With
5557 Mini-Fit Jr.™ Receptacle Housing

Plating min: Mating (µin)	200
Plating min: Mating (µm)	5.00
Plating min: Termination (µin)	200
Plating min: Termination (µm)	5.00
Polarized to Mating Part	Yes
Polarized to PCB	Yes
Shrouded	Fully
Stackable	No
Surface Mount Compatible (SMC)	No
Temperature Range - Operating	-40°C to +105°C
Termination Interface: Style	Through Hole

Electrical

Current - Maximum per Contact	13A
Voltage - Maximum	600V

Solder Process Data

Duration at Max. Process Temperature (seconds)	5
Lead-free Process Capability	Wave Capable (TH only)
Max. Cycles at Max. Process Temperature	1
Process Temperature max. C	240

Material Info

Old Part Number	5569-06A2-210

Reference - Drawing Numbers

Packaging Specification	PK-5569-002
Product Specification	PS-5556-001, PS-5557-045, RPS-5557-055
Sales Drawing	SDA-5569-NA2*-*
Test Summary	TS-5556-002

LEGEND:

5569 - N A * * - * - *

- BASE NUMBER
- CIRCUIT SIZE
- ASSEMBLY
- MOUNTING OPTION (SEE NOTE 6.)
- PLATING (SEE NOTE 2.)
- HOUSING MAT'L. (SEE NOTE 1.)
- PACKAGING (SEE NOTE 4.)

CIRCUIT SIZE	DIM. "A"	DIM. "B"
6	.54 (13.8)	.33 (8.4)
8	.71 (18.0)	.50 (12.6)
10	.87 (22.2)	.66 (16.8)
12	1.04 (26.4)	.83 (21.0)
14	1.20 (30.6)	.99 (25.2)
16	1.37 (34.8)	1.16 (29.4)
18	1.54 (39.0)	1.32 (33.6)
20	1.70 (43.2)	1.49 (37.8)
22	1.87 (47.4)	1.65 (42.0)
24	2.03 (51.6)	1.82 (46.2)

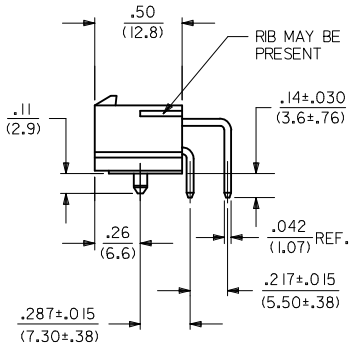

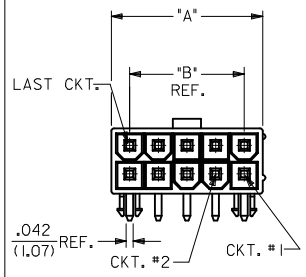

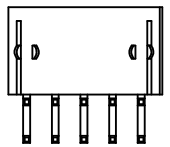

5569-*A2*-*

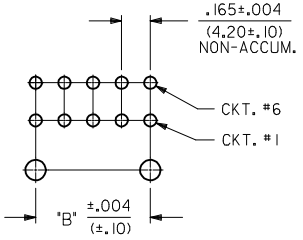

RECOMMENDED HOLE LAYOUT FOR .070/(1.78) MAX. THICK P.C. BOARD VIEWED FROM COMPONENT SIDE

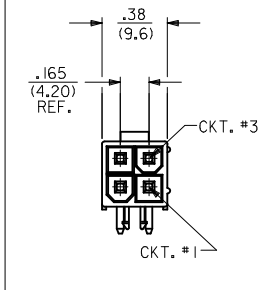

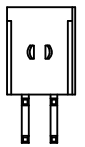

5569-04A2*-*

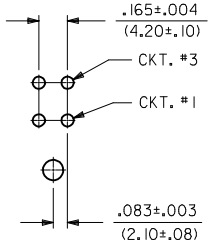

RECOMMENDED HOLE LAYOUT FOR .070/(1.78) MAX. THICK P.C. BOARD VIEWED FROM COMPONENT SIDE

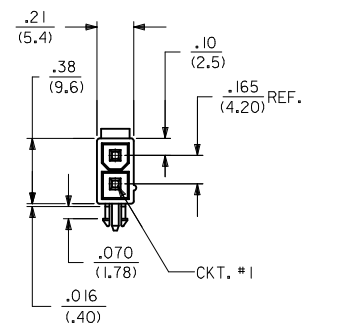

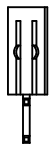

5569-02A2*-*

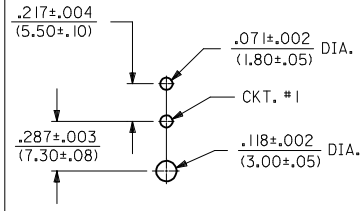

RECOMMENDED HOLE LAYOUT FOR .070/(1.78) MAX. THICK P.C. BOARD VIEWED FROM COMPONENT SIDE

NOTES:

1) MATERIAL:
   HOUSING:
   "BLANK" = NYLON (PA66), UNFILLED, UL94V-2, COLOR: NATURAL
   "BL" = NYLON (PA66), UNFILLED, UL94V-2, COLOR: BLACK
   "210" = NYLON (PA66), UNFILLED, UL94V-0, COLOR: NATURAL
   "400" = NYLON (PA66), UNFILLED, UL94V-0, COLOR: BLACK
   TERMINAL:
   BRASS ALLOY
2) FINISH (PLATING):
   "BLANK" = .000200/(0.00508) MIN. BRIGHT TIN OVER .000100/(0.00254) MIN. COPPER
   "G" = .000030/(0.00076) MIN. GOLD OVER .000050/(0.00127) MIN. NICKEL
   "G2" = .000015/(0.00038) MIN. GOLD OVER .000030/(0.00076) MIN. NICKEL
   "G3" = .000050/(0.00127) MIN. GOLD OVER .000050/(0.00127) MIN. NICKEL
   "*GS" = .000030/(0.00076) MIN. SELECT GOLD OVER .000100/(0.00254) MIN.SELECT MATTE TIN OVER .000050/(0.00127) MIN. NICKEL OVERALL
   "*GS2" = .000015/(0.00038) MIN. SELECT GOLD OVER .000100/(0.00254) MIN.SELECT MATTE TIN OVER .000050/(0.00127) MIN. NICKEL OVERALL
   "*GS3" = .000050/(0.00127) MIN. SELECT GOLD OVER .000100/(0.00254) MIN.SELECT MATTE TIN OVER .000050/(0.00127) MIN. NICKEL OVERALL
   "S" = .000100/(0.00254) MIN. BRIGHT TIN OVER .000050/(0.00127) MIN. NICKEL
   *THE PRIMARY SHIPPING CARTON WILL BE LABELED "COMPLIANT TO RoHS DIRECTIVE 2002/95/EC AND ELV ANNEX II OF DIRECTIVE 2000/53/EC"; CARTONS WITHOUT THIS LABEL MAY CONTAIN PRODUCT WITH TIN-LEAD PLATING.
3) PRODUCT SPECIFICATION: PS-5556-001
4) PACKAGING:
   "BLANK" = BULK PACKED PER PK-5569-002
   "T" = TRAY PACKED PER PK-5569-003
5) PART MATES WITH MINI-FIT JR. RECEPTACLE SERIES 5557.
6) MOUNTING OPTIONS:
   1 = SCREW MOUNT (SEE SD-5569-NA* SERIES DRAWING)
   2 = PEG MOUNT
7) DISCOLORATION IN THE BANDOLIER CARRIER AREA OF THE PIN IS INHERENT TO THE PLATING PROCESS AND IS DUE TO THE MASKING EFFECT OF THE CARRIER. THIS DISCOLORATION IS IN A NON-FUNCTIONAL AREA OF THE PIN AND WILL NOT AFFECT THE PERFORMANCE OF THE HEADER ASSEMBLY.
8) PART CONFORMS TO CLASS "B" REQUIREMENTS OF COSMETIC SPECIFICATION PS-45499-002.
9) CONNECTORS ARE NOT TO BE MATED AND UNMATED WHILE CIRCUITS ARE LIVE.
10) PARTS ARE NOT DESIGNED FOR CURRENT SHARING.

REV	DESCRIPTION	DRWN	CHKD	APPR	DATE
L3	CORRECTED -400 PARTS EC NO: UCP2010-0398	JAGUILAR	JBELL	FSMITH	2009/09/04 2009/09/14 2009/09/15

2-6	GENERAL DOCS.	L3
1	ME10	L3
SHT.	SOFTWARE	REV.

QUALITY SYMBOLS
▼=0
▽=0

GENERAL TOLERANCES (UNLESS SPECIFIED)

	mm	INCH
4 PLACES	± ---	± ---
3 PLACES	± ---	± .010
2 PLACES	± .25	± .015
1 PLACE	± .38	± ---

ANGULAR ±1/2°

DRAFT WHERE APPLICABLE MUST REMAIN WITHIN DIMENSIONS

DIMENSION STYLE	IN/MM
SCALE	1:1
DESIGN UNITS	METRIC
	THIRD ANGLE PROJECTION
DRAWN BY / DATE	RJF 1988/02/16
CHECKED BY / DATE	GT 1988/02/16
APPROVED BY / DATE	RAS 1988/02/16
MATERIAL NO.	SEE CHART
TITLE	MINI-FIT JR RIGHT ANGLE HEADER ASSEMBLIES WITH MOUNTING PEGS
	molex MOLEX INCORPORATED
DOCUMENT NO.	SDA-5569-NA2*-*
SHEET NO.	1 OF 6
SIZE	C

THIS DRAWING CONTAINS INFORMATION THAT IS PROPRIETARY TO MOLEX INCORPORATED AND SHOULD NOT BE USED WITHOUT WRITTEN PERMISSION

BULK PACKAGED PER PK-5569-002

PART NUMBER	ENG. NUMBER	CKT. SIZE	PLATING (NOTE 2)	HSG MAT'L	PART NUMBER	ENG. NUMBER	CKT. SIZE	PLATING (NOTE 2)	HSG MAT'L
39-30-1020	5569-02A2	2	TIN OVER COPPER SEE NOTE 2 OPTION "BLANK"	94V-2	39-30-0020	5569-02A2-210	2	TIN OVER COPPER SEE NOTE 2 OPTION "BLANK"	94V-0
39-30-1040	5569-04A2	4			39-30-0040	5569-04A2-210	4		
39-30-1060	5569-06A2	6			39-30-0060	5569-06A2-210	6		
39-30-1080	5569-08A2	8			39-30-0080	5569-08A2-210	8		
39-30-1100	5569-10A2	10			39-30-0100	5569-10A2-210	10		
39-30-1120	5569-12A2	12			39-30-0120	5569-12A2-210	12		
39-30-1140	5569-14A2	14			39-30-0140	5569-14A2-210	14		
39-30-1160	5569-16A2	16			39-30-0160	5569-16A2-210	16		
39-30-1180	5569-18A2	18			39-30-0180	5569-18A2-210	18		
39-30-1200	5569-20A2	20			39-30-0200	5569-20A2-210	20		
39-30-1220	5569-22A2	22			39-30-0220	5569-22A2-210	22		
39-30-1240	5569-24A2	24			39-30-0240	5569-24A2-210	24		
39-30-1021	5569-02A2G	2	30 μ" GOLD SEE NOTE 2 OPTION "G"	94V-2	39-30-1022	5569-02A2G-210	2	30 μ" GOLD SEE NOTE 2 OPTION "G"	94V-0
39-30-1041	5569-04A2G	4			39-30-1042	5569-04A2G-210	4		
39-30-1061	5569-06A2G	6			39-30-1062	5569-06A2G-210	6		
39-30-1081	5569-08A2G	8			39-30-1082	5569-08A2G-210	8		
39-30-1101	5569-10A2G	10			39-30-1102	5569-10A2G-210	10		
39-30-1121	5569-12A2G	12			39-30-1122	5569-12A2G-210	12		
39-30-1141	5569-14A2G	14			39-30-1142	5569-14A2G-210	14		
39-30-1161	5569-16A2G	16			39-30-1162	5569-16A2G-210	16		
39-30-1181	5569-18A2G	18			39-30-1182	5569-18A2G-210	18		
39-30-1201	5569-20A2G	20			39-30-1202	5569-20A2G-210	20		
39-30-1221	5569-22A2G	22			39-30-1222	5569-22A2G-210	22		
39-30-1241	5569-24A2G	24			39-30-1242	5569-24A2G-210	24		
39-30-0021	5569-02A2G2	2	15 μ" GOLD SEE NOTE 2 OPTION "G2"	94V-2	39-30-0022	5569-02A2G2-210	2	15 μ" GOLD SEE NOTE 2 OPTION "G2"	94V-0
39-30-0041	5569-04A2G2	4			39-30-0042	5569-04A2G2-210	4		
39-30-0061	5569-06A2G2	6			39-30-0062	5569-06A2G2-210	6		
39-30-0081	5569-08A2G2	8			39-30-0082	5569-08A2G2-210	8		
39-30-0101	5569-10A2G2	10			39-30-0102	5569-10A2G2-210	10		
39-30-0121	5569-12A2G2	12			39-30-0122	5569-12A2G2-210	12		
39-30-0141	5569-14A2G2	14			39-30-0142	5569-14A2G2-210	14		
39-30-0161	5569-16A2G2	16			39-30-0162	5569-16A2G2-210	16		
39-30-0181	5569-18A2G2	18			39-30-0182	5569-18A2G2-210	18		
39-30-0201	5569-20A2G2	20			39-30-0202	5569-20A2G2-210	20		
39-30-0221	5569-22A2G2	22			39-30-0222	5569-22A2G2-210	22		
39-30-0241	5569-24A2G2	24			39-30-0242	5569-24A2G2-210	24		
NOT TOOLED	5569-02A2G3	2	50 μ" GOLD SEE NOTE 2 OPTION "G3"	94V-2	NOT TOOLED	5569-02A2G3-210	2	50 μ" GOLD SEE NOTE 2 OPTION "G3"	94V-0
15-27-1514	5569-04A2G3	4			NOT TOOLED	5569-04A2G3-210	4		
15-27-1511	5569-06A2G3	6			NOT TOOLED	5569-06A2G3-210	6		
15-27-1512	5569-08A2G3	8			NOT TOOLED	5569-08A2G3-210	8		
15-27-1503	5569-10A2G3	10			15-27-1504	5569-10A2G3-210	10		
NOT TOOLED	5569-12A2G3	12			NOT TOOLED	5569-12A2G3-210	12		
NOT TOOLED	5569-14A2G3	14			NOT TOOLED	5569-14A2G3-210	14		
15-27-1513	5569-16A2G3	16			NOT TOOLED	5569-16A2G3-210	16		
NOT TOOLED	5569-18A2G3	18			NOT TOOLED	5569-18A2G3-210	18		
NOT TOOLED	5569-20A2G3	20			NOT TOOLED	5569-20A2G3-210	20		
NOT TOOLED	5569-22A2G3	22			NOT TOOLED	5569-22A2G3-210	22		
NOT TOOLED	5569-24A2G3	24			NOT TOOLED	5569-24A2G3-210	24		

REVISION:	ECR/ECN INFORMATION:	TITLE:	SHEET No.
L3	EC No: **UCP2010-0398** DATE: **2009/09/02**	MINI-FIT JR.® RIGHT ANGLE HEADER ASSEMBLIES WITH MOUNTING PEGS	- 2 -

DOCUMENT NUMBER:	Drawn By:	Checked By:	Approved By:
SDA-5569-NA2*-*	**JJAGUILAR**	**JBELL**	**FSMITH**

BULK PACKAGED PK-5569-002

PART NUMBER	ENG. NUMBER	CKT. SIZE	PLATING (NOTE 2)	HSG MAT'L	PART NUMBER	ENG. NUMBER	CKT. SIZE	PLATING (NOTE 2)	HSG MAT'L
39-30-0023	5569-02A2GS	2	30 µ" SELECT GOLD SEE NOTE 2 OPTION "GS"	94V-2	39-30-0024	5569-02A2GS-210	2	30 µ" SELECT GOLD SEE NOTE 2 OPTION "GS"	94V-0
39-30-0043	5569-04A2GS	4			39-30-0044	5569-04A2GS-210	4		
39-30-0063	5569-06A2GS	6			39-30-0064	5569-06A2GS-210	6		
39-30-0083	5569-08A2GS	8			39-30-0084	5569-08A2GS-210	8		
39-30-0103	5569-10A2GS	10			39-30-0104	5569-10A2GS-210	10		
39-30-0123	5569-12A2GS	12			39-30-0124	5569-12A2GS-210	12		
39-30-0143	5569-14A2GS	14			39-30-0144	5569-14A2GS-210	14		
39-30-0163	5569-16A2GS	16			39-30-0164	5569-16A2GS-210	16		
39-30-0183	5569-18A2GS	18			39-30-0184	5569-18A2GS-210	18		
39-30-0203	5569-20A2GS	20			39-30-0204	5569-20A2GS-210	20		
39-30-0223	5569-22A2GS	22			39-30-0224	5569-22A2GS-210	22		
39-30-0243	5569-24A2GS	24			39-30-0244	5569-24A2GS-210	24		
39-30-1023	5569-02A2GS2	2	15 µ" SELECT GOLD SEE NOTE 2 OPTION "GS2"	94V-2	39-30-1024	5569-02A2GS2-210	2	15 µ" SELECT GOLD SEE NOTE 2 OPTION "GS2"	94V-0
39-30-1043	5569-04A2GS2	4			39-30-1044	5569-04A2GS2-210	4		
39-30-1063	5569-06A2GS2	6			39-30-1064	5569-06A2GS2-210	6		
39-30-1083	5569-08A2GS2	8			39-30-1084	5569-08A2GS2-210	8		
39-30-1103	5569-10A2GS2	10			39-30-1104	5569-10A2GS2-210	10		
39-30-1123	5569-12A2GS2	12			39-30-1124	5569-12A2GS2-210	12		
39-30-1143	5569-14A2GS2	14			39-30-1144	5569-14A2GS2-210	14		
39-30-1163	5569-16A2GS2	16			39-30-1164	5569-16A2GS2-210	16		
39-30-1183	5569-18A2GS2	18			39-30-1184	5569-18A2GS2-210	18		
39-30-1203	5569-20A2GS2	20			39-30-1204	5569-20A2GS2-210	20		
39-30-1223	5569-22A2GS2	22			39-30-1224	5569-22A2GS2-210	22		
39-30-1243	5569-24A2GS2	24			39-30-1244	5569-24A2GS2-210	24		
39-34-4026	5569-02A2GS3	2	50 µ" SELECT GOLD SEE NOTE 2 OPTION "GS3"	94V-2	39-34-4027	5569-02A2GS3-210	2	50 µ" SELECT GOLD SEE NOTE 2 OPTION "GS3"	94V-0
39-34-4046	5569-04A2GS3	4			39-34-4047	5569-04A2GS3-210	4		
NOT TOOLED	5569-06A2GS3	6			NOT TOOLED	5569-06A2GS3-210	6		
NOT TOOLED	5569-08A2GS3	8			NOT TOOLED	5569-08A2GS3-210	8		
NOT TOOLED	5569-10A2GS3	10			NOT TOOLED	5569-10A2GS3-210	10		
NOT TOOLED	5569-12A2GS3	12			NOT TOOLED	5569-12A2GS3-210	12		
NOT TOOLED	5569-14A2GS3	14			NOT TOOLED	5569-14A2GS3-210	14		
NOT TOOLED	5569-16A2GS3	16			NOT TOOLED	5569-16A2GS3-210	16		
NOT TOOLED	5569-18A2GS3	18			NOT TOOLED	5569-18A2GS3-210	18		
NOT TOOLED	5569-20A2GS3	20			NOT TOOLED	5569-20A2GS3-210	20		
NOT TOOLED	5569-22A2GS3	22			NOT TOOLED	5569-22A2GS3-210	22		
NOT TOOLED	5569-24A2GS3	24			NOT TOOLED	5569-24A2GS3-210	24		
39-30-7025	5569-02A2S	2	TIN OVER NICKEL SEE NOTE 2 OPTION "S"	94V-2	39-30-7026	5569-02A2S-210	2	TIN OVER NICKEL SEE NOTE 2 OPTION "S"	94V-0
39-30-7045	5569-04A2S	4			39-30-7046	5569-04A2S-210	4		
39-30-7065	5569-06A2S	6			39-30-7066	5569-06A2S-210	6		
39-30-7085	5569-08A2S	8			39-30-7086	5569-08A2S-210	8		
39-30-7105	5569-10A2S	10			39-30-7106	5569-10A2S-210	10		
39-30-7125	5569-12A2S	12			39-30-7126	5569-12A2S-210	12		
39-30-7145	5569-14A2S	14			39-30-7146	5569-14A2S-210	14		
39-30-7165	5569-16A2S	16			39-30-7166	5569-16A2S-210	16		
39-30-7185	5569-18A2S	18			39-30-7186	5569-18A2S-210	18		
39-30-7205	5569-20A2S	20			39-30-7206	5569-20A2S-210	20		
39-30-7225	5569-22A2S	22			39-30-7226	5569-22A2S-210	22		
39-30-7245	5569-24A2S	24			39-30-7246	5569-24A2S-210	24		

REVISION:	ECR/ECN INFORMATION:	TITLE:	SHEET No.
L3	EC No: **UCP2010-0398** DATE: **2009/09/02**	MINI-FIT JR.® RIGHT ANGLE HEADER ASSEMBLIES WITH MOUNTING PEGS	- 3 -

DOCUMENT NUMBER:	Drawn By:	Checked By:	Approved By:
SDA-5569-NA2*-*	**JJAGUILAR**	**JBELL**	**FSMITH**

BULK PACKAGED PER PK-5569-002

PART NUMBER	ENG. NUMBER	CKT. SIZE	PLATING (NOTE 2)	HSG MAT'L	PART NUMBER	ENG. NUMBER	CKT. SIZE	PLATING (NOTE 2)	HSG MAT'L
		2			39-31-1021	5569-02A2-BL	2		
		4			39-31-1041	5569-04A2-BL	4		
		6			39-31-1061	5569-06A2-BL	6		
		8			39-31-1081	5569-08A2-BL	8	TIN OVER	
		10			39-31-1101	5569-10A2-BL	10	COPPER	
		12			39-31-1121	5569-12A2-BL	12	SEE	BLACK
		14			39-31-1141	5569-14A2-BL	14	NOTE 2	94V-2
		16			39-31-1161	5569-16A2-BL	16	OPTION	
		18			39-31-1181	5569-18A2-BL	18	"BLANK"	
		20			39-31-1201	5569-20A2-BL	20		
		22			39-31-1221	5569-22A2-BL	22		
		24			39-31-1241	5569-24A2-BL	24		
		2			39-31-6029	5569-02A2G-BL	2		
		4			39-31-6049	5569-04A2G-BL	4		
		6			39-31-6069	5569-06A2G-BL	6		
		8			39-31-6089	5569-08A2G-BL	8	30 μ"	
		10			39-31-6109	5569-10A2G-BL	10	GOLD	
		12			39-31-6129	5569-12A2G-BL	12	SEE	BLACK
		14			39-31-6149	5569-14A2G-BL	14	NOTE 2	94V-2
		16			39-31-6169	5569-16A2G-BL	16	OPTION	
		18			39-31-6189	5569-18A2G-BL	18	"G"	
		20			39-31-6209	5569-20A2G-BL	20		
		22			39-31-6229	5569-22A2G-BL	22		
		24			39-31-6249	5569-24A2G-BL	24		
		2							
		4							
		6							
		8							
		10							
		12							
		14							
		16							
		18							
		20							
		22							
		24							
39-34-9021	5569-02A2S-400	2							
39-34-9041	5569-04A2S-400	4							
39-34-9061	5569-06A2S-400	6							
39-34-9081	5569-08A2S-400	8	TIN OVER						
39-34-9101	5569-10A2S-400	10	NICKEL						
39-34-9121	5569-12A2S-400	12	SEE	BLACK					
39-34-9141	5569-14A2S-400	14	NOTE 2	94V-0					
39-34-9161	5569-16A2S-400	16	OPTION						
39-34-9181	5569-18A2S-400	18	"S"						
39-34-9201	5569-20A2S-400	20							
39-34-9221	5569-22A2S-400	22							
39-34-9241	5569-24A2S-400	24							

REVISION:	ECR/ECN INFORMATION:	TITLE:	SHEET No.
L3	EC No: **UCP2010-0398** DATE: **2009/09/02**	MINI-FIT JR.® RIGHT ANGLE HEADER ASSEMBLIES WITH MOUNTING PEGS	- 4 -

DOCUMENT NUMBER:	Drawn By:	Checked By:	Approved By:
SDA-5569-NA2*-*	**JJAGUILAR**	**JBELL**	**FSMITH**

BULK PACKAGED PER PK-5569-002

PART NUMBER	ENG. NUMBER	CKT. SIZE	PLATING (NOTE 2)	HSG MAT'L
39-31-9029	5569-02A2S-BL	2	TIN OVER NICKEL SEE NOTE 2 OPTION "S"	BLACK 94V-2
39-31-9049	5569-04A2S-BL	4		
39-31-9069	5569-06A2S-BL	6		
39-31-9089	5569-08A2S-BL	8		
39-31-9109	5569-10A2S-BL	10		
39-31-9129	5569-12A2S-BL	12		
39-31-9149	5569-14A2S-BL	14		
39-31-9169	5569-16A2S-BL	16		
39-31-9189	5569-18A2S-BL	18		
39-31-9209	5569-20A2S-BL	20		
39-31-9229	5569-22A2S-BL	22		
39-31-9249	5569-24A2S-BL	24		

REVISION:	ECR/ECN INFORMATION:	TITLE:	SHEET No.
L3	EC No: **UCP2010-0398** DATE: **2009/09/02**	MINI-FIT JR.® RIGHT ANGLE HEADER ASSEMBLIES WITH MOUNTING PEGS	- 5 -

DOCUMENT NUMBER:	Drawn By:	Checked By:	Approved By:
SDA-5569-NA2*-*	**JJAGUILAR**	**JBELL**	**FSMITH**

TRAY PACKAGED PER PK-5569-003

PART NUMBER	ENG. NUMBER	CKT. SIZE	PLATING (NOTE 2)	HSG MAT'L	PART NUMBER	ENG. NUMBER	CKT. SIZE	PLATING (NOTE 2)	HSG MAT'L
26-01-3127	5569-02A2GS2-210-T	2	15 µ" SELECT GOLD SEE NOTE 2 OPTION "GS2"	94V-0			2		
26-01-3128	5569-04A2GS2-210-T	4					4		
NOT TOOLED	5569-06A2GS2-210-T	6					6		
NOT TOOLED	5569-08A2GS2-210-T	8					8		
NOT TOOLED	5569-10A2GS2-210-T	10					10		
NOT TOOLED	5569-12A2GS2-210-T	12					12		
NOT TOOLED	5569-14A2GS2-210-T	14					14		
NOT TOOLED	5569-16A2GS2-210-T	16					16		
NOT TOOLED	5569-18A2GS2-210-T	18					18		
NOT TOOLED	5569-20A2GS2-210-T	20					20		
NOT TOOLED	5569-22A2GS2-210-T	22					22		
NOT TOOLED	5569-24A2GS2-210-T	24					24		
26-01-3141	5569-02A2GS3-T	2	50 µ" SELECT GOLD SEE NOTE 2 OPTION "GS3"	94V-2			2		
26-01-3142	5569-04A2GS3-T	4					4		
26-01-3143	5569-06A2GS3-T	6					6		
26-01-3144	5569-08A2GS3-T	8					8		
NOT TOOLED	5569-10A2GS3-T	10					10		
NOT TOOLED	5569-12A2GS3-T	12					12		
NOT TOOLED	5569-14A2GS3-T	14					14		
26-01-3148	5569-16A2GS3-T	16					16		
NOT TOOLED	5569-18A2GS3-T	18					18		
NOT TOOLED	5569-20A2GS3-T	20					20		
NOT TOOLED	5569-22A2GS3-T	22					22		
NOT TOOLED	5569-24A2GS3-T	24					24		
		2					2		
		4					4		
		6					6		
		8					8		
		10					10		
		12					12		
		14					14		
		16					16		
		18					18		
		20					20		
		22					22		
		24					24		
		2					2		
		4					4		
		6					6		
		8					8		
		10					10		
		12					12		
		14					14		
		16					16		
		18					18		
		20					20		
		22					22		
		24					24		

REVISION:	ECR/ECN INFORMATION:	TITLE:	SHEET No.
L3	EC No: **UCP2010-0398** DATE: **2009/09/02**	MINI-FIT JR.® RIGHT ANGLE HEADER ASSEMBLIES WITH MOUNTING PEGS	- 6 -

DOCUMENT NUMBER:	Drawn By:	Checked By:	Approved By:
SDA-5569-NA2*-*	**JJAGUILAR**	**JBELL**	**FSMITH**

TRAY PACKAGED PER PK-5569-003

PART NUMBER	ENG. NUMBER	CKT. SIZE	PLATING (NOTE 2)	HSG MAT'L	PART NUMBER	ENG. NUMBER	CKT. SIZE	PLATING (NOTE 2)	HSG MAT'L
50-36-1757	5569-02A2S-T	2	TIN OVER NICKEL SEE NOTE 2 OPTION "S"	94V-2	50-36-1758	5569-02A2S-210-T	2	TIN OVER NICKEL SEE NOTE 2 OPTION "S"	94V-0
50-36-1767	5569-04A2S-T	4			50-36-1768	5569-04A2S-210-T	4		
50-36-1777	5569-06A2S-T	6			50-36-1778	5569-06A2S-210-T	6		
50-36-1787	5569-08A2S-T	8			50-36-1788	5569-08A2S-210-T	8		
50-36-1797	5569-10A2S-T	10			50-36-1798	5569-10A2S-210-T	10		
50-36-1807	5569-12A2S-T	12			50-36-1808	5569-12A2S-210-T	12		
50-36-1817	5569-14A2S-T	14			50-36-1818	5569-14A2S-210-T	14		
50-36-1827	5569-16A2S-T	16			50-36-1828	5569-16A2S-210-T.	16		
50-36-1837	5569-18A2S-T	18			50-36-1838	5569-18A2S-210-T	18		
50-36-1847	5569-20A2S-T	20			50-36-1848	5569-20A2S-210-T	20		
50-36-1857	5569-22A2S-T	22			50-36-1858	5569-22A2S-210-T	22		
50-36-1867	5569-24A2S-T	24			50-36-1868	5569-24A2S-210-T	24		
50-36-1755	5569-02A2GS-T	2	30 µ" SELECT GOLD SEE NOTE 2 OPTION "GS"	94V-2	50-36-1756	5569-02A2GS-210-T	2	30 µ" SELECT GOLD SEE NOTE 2 OPTION "GS"	94V-0
50-36-1765	5569-04A2GS-T	4			50-36-1766	5569-04A2GS-210-T	4		
50-36-1775	5569-06A2GS-T	6			50-36-1776	5569-06A2GS-210-T	6		
50-36-1785	5569-08A2GS-T	8			50-36-1786	5569-08A2GS-210-T	8		
50-36-1795	5569-10A2GS-T	10			50-36-1796	5569-10A2GS-210-T	10		
50-36-1805	5569-12A2GS-T	12			50-36-1806	5569-12A2GS-210-T	12		
50-36-1815	5569-14A2GS-T	14			50-36-1816	5569-14A2GS-210-T	14		
50-36-1825	5569-16A2GS-T	16			50-36-1826	5569-16A2GS-210-T	16		
50-36-1835	5569-18A2GS-T	18			50-36-1836	5569-18A2GS-210-T	18		
50-36-1845	5569-20A2GS-T	20			50-36-1846	5569-20A2GS-210-T	20		
50-36-1855	5569-22A2GS-T	22			50-36-1856	5569-22A2GS-210-T	22		
50-36-1865	5569-24A2GS-T	24			50-36-1866	5569-24A2GS-210-T	24		
		2	50 µ" SELECT GOLD SEE NOTE 2 OPTION "GS3"	94V-0	26-01-3101	5569-02A2GS-BL-T	2	30 µ" SELECT GOLD SEE NOTE 2 OPTION "GS"	BLACK 94V-2
		4			NOT TOOLED	5569-04A2GS-BL-T	4		
		6			NOT TOOLED	5569-06A2GS-BL-T	6		
		8			NOT TOOLED	5569-08A2GS-BL-T	8		
26-01-3094	5569-10AGS3-210-T	10			NOT TOOLED	5569-10A2GS-BL-T	10		
		12			NOT TOOLED	5569-12A2GS-BL-T	12		
		14			NOT TOOLED	5569-14A2GS-BL-T	14		
		16			26-01-3108	5569-16A2GS-BL-T	16		
		18			NOT TOOLED	5569-18A2GS-BL-T	18		
		20			NOT TOOLED	5569-20A2GS-BL-T	20		
		22			NOT TOOLED	5569-22A2GS-BL-T	22		
		24			NOT TOOLED	5569-24A2GS-BL-T	24		
26-01-3114	5569-02A2GS2-T	2	15 µ" SELECT GOLD SEE NOTE 2 OPTION "GS2"	94V-2			2		
26-01-3115	5569-04A2GS2-T	4					4		
26-01-3116	5569-06A2GS2-T	6					6		
NOT TOOLED	5569-08A2GS2-T	8					8		
NOT TOOLED	5569-10A2GS2-T	10					10		
26-01-3119	5569-12A2GS2-T	12					12		
NOT TOOLED	5569-14A2GS2-T	14					14		
NOT TOOLED	5569-16A2GS2-T	16					16		
NOT TOOLED	5569-18A2GS2-T	18					18		
NOT TOOLED	5569-20A2GS2-T	20					20		
NOT TOOLED	5569-22A2GS2-T	22					22		
26-01-3126	5569-24A2GS2-T	24					24		

REVISION:	ECR/ECN INFORMATION:	TITLE:	SHEET No.
L3	EC No: **UCP2010-0398** DATE: **2009/09/02**	MINI-FIT JR.® RIGHT ANGLE HEADER ASSEMBLIES WITH MOUNTING PEGS	- 7 -

DOCUMENT NUMBER:	Drawn By:	Checked By:	Approved By:
SDA-5569-NA2*-*	**JJAGUILAR**	**JBELL**	**FSMITH**