This document was generated on 05/19/2010

PLEASE CHECK WWW.MOLEX.COM FOR LATEST PART INFORMATION

Part Number: 0039012185
Status: Active
Overview: minifit_jr
Description: 4.20mm (.165") Pitch Mini-Fit Jr.™ Receptacle Housing, Dual Row, UL 94V-0, 18 Circuits

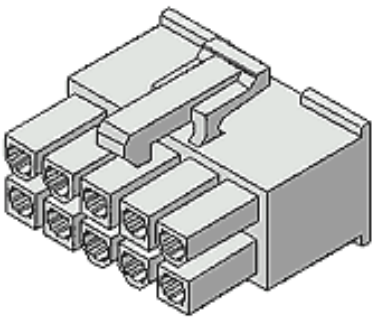

Series image - Reference only

Documents:

3D Model
Test Summary (PDF)
Drawing (PDF)
Product Specification PS-5556-001 (PDF)
RoHS Certificate of Compliance (PDF)

Agency Certification

CSA	LR19980
TUV	R72081037
UL	E29179

General

Product Family	Crimp Housings
Series	5557
Comments	Current = 13A max. per circuit when header is mated to a receptacle loaded with 45750 series terminals crimped to 16 AWG wire. . See Molex product specification PS-45750-001 for additional current de-rating information.
Overview	minifit_jr
Product Name	Mini-Fit Jr.™

Physical

Breakaway	No
Circuits (maximum)	18
Color - Resin	Ivory
Flammability	94V-0
Gender	Female
Glow-Wire Compliant	No
Material - Resin	Nylon
Number of Rows	2
Packaging Type	Bag
Panel Mount	No
Pitch - Mating Interface (in)	0.165 In
Pitch - Mating Interface (mm)	4.20 mm
Pitch - Term. Interface (in)	0.165 In
Pitch - Term. Interface (mm)	4.20 mm
Polarized to Mating Part	Yes
Stackable	No
Temperature Range - Operating	-40°C to +105°C

Electrical

Current - Maximum per Contact	13A

Material Info

Old Part Number	5557-18R-210

Reference - Drawing Numbers

Packaging Specification	SPK-5557-001
Product Specification	PS-5556-001, RPS-5557-004, RPS-5557-024, RPS-5557-031, RPS-5557-036, RPS-5557-037, RPS-5557-050, RPS-5557-058

EU RoHS
ELV and RoHS Compliant
REACH SVHC
Contains SVHC: No
Halogen-Free Status
Halogen-Free

China RoHS

Need more information on product environmental compliance?

Email productcompliance@molex.com
For a multiple part number RoHS Certificate of Compliance, click here

Please visit the Contact Us section for any non-product compliance questions.

Search Parts in this Series
5557Series

Mates With
5559d , 5566vw , 5566vwo , 5569rdf , 5569rdp , 43810a , 43810b , 43810c , 43810d , 44068a , 44068b , 44068c , 44068d , 44281 , 44472dw , 44472dwo , 87427, 87427r, 87427rf, 42404 , 44474 , 42440 , 43879 , 42475

Use With
5556 , 44476 , 44485 , 41995

This document was generated on 05/19/2010

PLEASE CHECK WWW.MOLEX.COM FOR LATEST PART INFORMATION

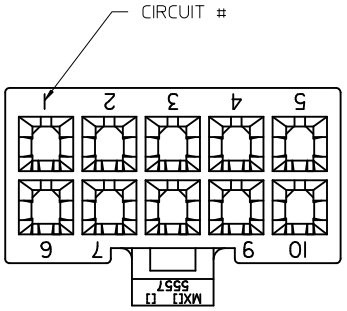

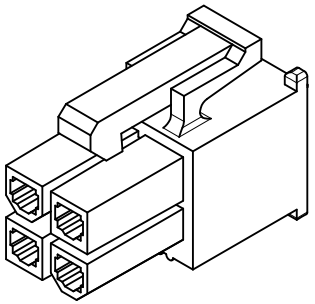

4 CKT SHOWN

NOTES:
1) MATERIAL:
"BLANK" = NYLON 6/6, 94V-2, COLOR: NATURAL.
"BL" = NYLON 6/6, 94V-2, COLOR: BLACK.
"RE"= NYLON 6/6, 94V-2, COLOR: RED.
"YE"= NYLON 6/6, 94V-2, COLOR: YELLOW
"210" = NYLON 6/6, 94V-0, COLOR: NATURAL.
"225" = NYLON (PA6), UL94V-0, COLOR: BLACK, IEC 60335-1, 4th EDITION GLOW WIRE CAPABLE.
"225N" = NYLON (PA6), UL94V-0, COLOR: WHITE, IEC 60335-1, 4th EDITION GLOW WIRE CAPABLE.
"400" = NYLON 6/6, 94V-0, COLOR: BLACK.
2) FINISH: NOT APPLICABLE
3) PRODUCT SPECIFICATION: PS-5556-001
4) PACKAGING: BULK
5) PART MATES WITH MOLEX PLUG #5559 AND HEADERS #5566, #5569.
6) PART TO BE USED WITH MOLEX FEMALE TERMINAL #5556.
7) PART IS NOT DESIGNED FOR CURRENT SHARING.
8) CONNECTORS ARE NOT TO BE MATED OR UNMATED WHILE CIRCUITS ARE LIVE.
9) WIRES ARE TO BE DRESSED IN SUCH A MANNER TO ALLOW THE TERMINALS TO FLOAT FREELY IN THE POCKET.
10) PART CONFORMS TO CLASS "B" REQUIREMENTS OF COSMETIC SPECIFICATION PS-45499-002 WITH THE EXCEPTION OF DISCOLORATION, FLASH AND SINK MEET CLASS "C" REQUIREMENTS.
⚠11 TO BE MEASURED AT SURFACE Z

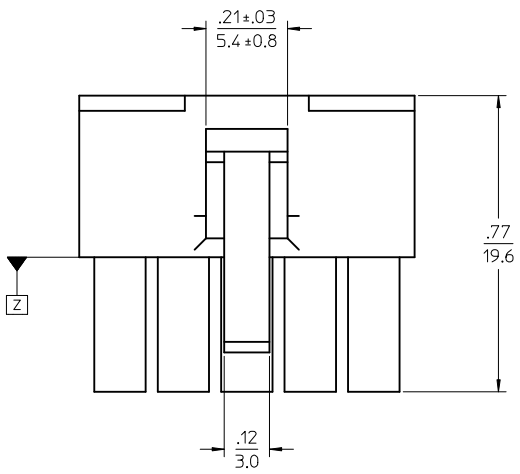

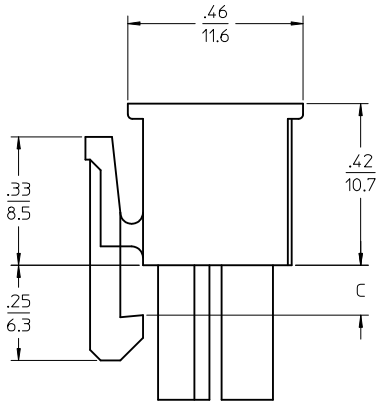

4-24 CKT

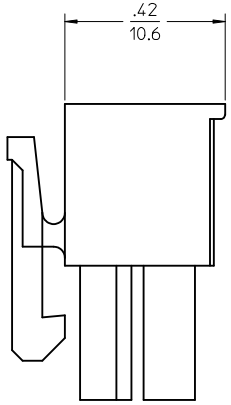

2 CKT ONLY

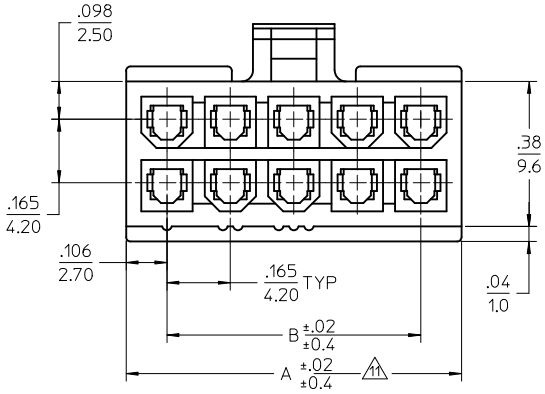

2.031/(51.6)	1.819/(46.2)	.142 (3.6)	24
1.866/(47.4)	1.654/(42.0)		22
1.701/(43.2)	1.488/(37.8)		20
1.535/(39.0)	1.323/(33.6)		18
1.370/(34.8)	1.157/(29.4)	.129 (3.3)	16
1.205/(30.6)	0.992/(25.2)		14
1.039/(26.4)	0.827/(21.0)		12
0.874/(22.2)	0.661/(16.8)		10
0.709/(18.0)	0.496/(12.6)		8
0.543/(13.8)	0.331/(8.4)		6
0.378/(9.6)	0.165/(4.2)		4
0.213/(5.4)	—		2
A	B	C	NO. OF CKTS.

MODIFIED ISO VIEW
EC NO: UCP2010-2566 2010/04/05
DRWN: JJAGUILAR 97/01/08
CHK'D: JBELL 2010/04/14
APPR: FSMITH
DESCRIPTION
REV
J4

QUALITY SYMBOLS
▼=0
▽=0

GENERAL TOLERANCES (UNLESS SPECIFIED)

	mm	INCH
4 PLACES	± --	± ---
3 PLACES	± --	± .010
2 PLACES	± .25	± .015
1 PLACE	± 0.38	± ---
ANGULAR ± 3 °		

DRAFT WHERE APPLICABLE MUST REMAIN WITHIN DIMENSIONS

DIMENSION STYLE: IN/MM
SCALE: 4:1
DESIGN UNITS: METRIC
THIRD ANGLE PROJECTION

DRAWN BY: S.MOCHIZUKI DATE: '90/02/22
CHECKED BY: M.FUKUSHIMA DATE: '97/01/08
APPROVED BY: M.FUKUSHIMA DATE: '97/01/08

TITLE: NEW MINI FIT CONN REC. HOUSING

molex MOLEX INCORPORATED

MATERIAL NO.: SEE SHEET 2
DOCUMENT NO.: SD-5557-003
SHEET NO.: 1 OF 2

SIZE: C

THIS DRAWING CONTAINS INFORMATION THAT IS PROPRIETARY TO MOLEX INCORPORATED AND SHOULD NOT BE USED WITHOUT WRITTEN PERMISSION

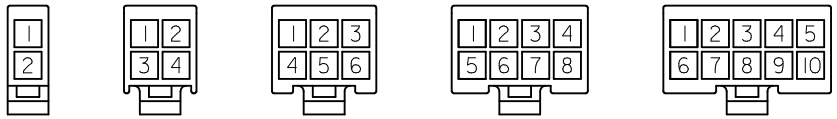

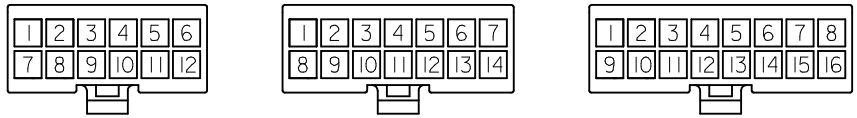

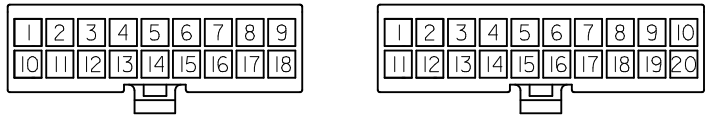

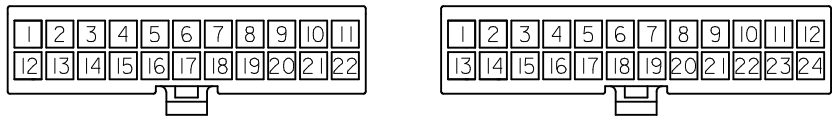

CIRCUIT SIZE LAYOUT

(NOT TO SCALE)

	V-0 GLOW WIRE (BLACK)				V-0 GLOW WIRE (WHITE)		
	50-36-1667	5557-24R-225	24		-	-	24
	26-01-3167	5557-22R-225	22		-	-	22
*	26-01-3166	5557-20R-225	20		-	-	20
	50-36-1668	5557-18R-225	18		-	-	18
	50-36-1669	5557-16R-225	16		-	-	16
	50-36-2293	5557-14R-225	14		-	-	14
	50-36-1674	5557-12R-225	12		-	-	12
	50-36-1671	5557-10R-225	10		-	-	10
	50-36-1713	5557-08R-225	8		-	-	8
	50-36-1672	5557-06R-225	6		-	-	6
	50-30-4461	5557-04R-225	4		50-36-2301	5557-04R-225N	4
	50-36-1673	5557-02R-225	2		-	-	2
	EDP. NO.	ENG. NO.	NO. OF CKTS.		EDP. NO.	ENG. NO.	NO. OF CKTS.

	V-0 (BLACK)				V-0 (NATURAL)		
*	39-03-9242	5557-24R-400	24		39-01-2245	5557-24R-210	24
*	39-03-9222	5557-22R-400	22		39-01-2225	5557-22R-210	22
*	39-03-9202	5557-20R-400	20		39-01-2205	5557-20R-210	20
*	39-03-9182	5557-18R-400	18		39-01-2185	5557-18R-210	18
*	39-03-9162	5557-16R-400	16		39-01-2165	5557-16R-210	16
*	39-03-9142	5557-14R-400	14		39-01-2145	5557-14R-210	14
*	39-03-9122	5557-12R-400	12		39-01-2125	5557-12R-210	12
*	39-03-9102	5557-10R-400	10		39-01-2105	5557-10R-210	10
*	39-03-9082	5557-08R-400	8		39-01-2085	5557-08R-210	8
*	39-03-9062	5557-06R-400	6		39-01-2065	5557-06R-210	6
	39-03-9042	5557-04R-400	4		39-01-2045	5557-04R-210	4
	39-03-9022	5557-02R-400	2		39-01-2025	5557-02R-210	2
	EDP. NO.	ENG. NO.	NO. OF CKTS.		EDP. NO.	ENG. NO.	NO. OF CKTS.

* = CONSULT FACTORY FOR AVAILABILITY.

	V-2 (YELLOW)				V-2 (RED)				V-2 (BLACK)				V-2 (NATURAL)		
			24		-	-	24	*	39-01-3245	5557-24R-BL	24		39-01-2240	5557-24R	24
			22		-	-	22		39-01-3225	5557-22R-BL	22		39-01-2220	5557-22R	22
			20		-	-	20	*	39-01-3205	5557-20R-BL	20		39-01-2200	5557-20R	20
			18		-	-	18	*	39-01-3185	5557-18R-BL	18		39-01-2180	5557-18R	18
			16		-	-	16	*	39-01-3165	5557-16R-BL	16		39-01-2160	5557-16R	16
			14		-	-	14		39-01-3145	5557-14R-BL	14		39-01-2140	5557-14R	14
			12		-	-	12		39-01-3125	5557-12R-BL	12		39-01-2120	5557-12R	12
			10		-	-	10		39-01-3105	5557-10R-BL	10		39-01-2100	5557-10R	10
			8		-	-	8		39-01-3085	5557-08R-BL	8		39-01-2080	5557-08R	8
*	39-02-8061	5557-06R-YE	6		-	-	6		39-01-3065	5557-06R-BL	6		39-01-2060	5557-06R	6
*	39-02-8041	5557-04R-YE	4	*	39-02-8040	5557-04R-RE	4		39-01-3045	5557-04R-BL	4		39-01-2040	5557-04R	4
*	39-02-8021	5557-02R-YE	2		-	-	2		39-01-3025	5557-02R-BL	2		39-01-2020	5557-02R	2
	EDP. NO.	ENG. NO.	NO. OF CKTS.		EDP. NO.	ENG. NO.	NO. OF CKTS.		EDP. NO.	ENG. NO.	NO. OF CKTS.		EDP. NO.	ENG. NO.	NO. OF CKTS.

LEGEND

5557-**R-*

- ** : CIRCUIT SIZE
- R : RECEPTACLE
- * : MATERIAL (SEE NOTE 1)

MODIFED CHARTS
EC NO: UCP2010-2566 2010/04/05
DRWN: JJAGUILAR '97/01/08
CH'KD: JBELL
APPR: FSMITH 2010/04/14
DESCRIPTION
REV
J4

QUALITY SYMBOLS
▼=0
▽C=0

GENERAL TOLERANCES (UNLESS SPECIFIED)

	mm	INCH
4 PLACES	± 0.2	±---
3 PLACES	± 0.3	±---
2 PLACES	± 0.4	±---
1 PLACE	±---	±---
ANGULAR ± 3 °		

DRAFT WHERE APPLICABLE MUST REMAIN WITHIN DIMENSIONS

DIMENSION STYLE: MM ONLY
SCALE: 1:1
DESIGN UNITS: METRIC
THIRD ANGLE PROJECTION

DRAWN BY: S.MOCHIZUKI DATE: '90/02/22
CHECKED BY: M.FUKUSHIMA DATE: '97/01/08
APPROVED BY: M.FUKUSHIMA DATE: '97/01/08

TITLE: NEW MINI FIT CONN REC. HOUSING

MOLEX INCORPORATED

MATERIAL NO.: SEE CHART
DOCUMENT NO.: SD-5557-003
SHEET NO.: 2 OF 2
SIZE: C

THIS DRAWING CONTAINS INFORMATION THAT IS PROPRIETARY TO MOLEX INCORPORATED AND SHOULD NOT BE USED WITHOUT WRITTEN PERMISSION