This document was generated on 10/13/2014

PLEASE CHECK WWW.MOLEX.COM FOR LATEST PART INFORMATION

Part Number: 38740-6113
Status: Active
Overview: Beau™ Barrier Strips
Description: 11.11mm Pitch Beau™ PCB Fixed Mount Barrier Terminal Strip, Low Profile, 300V, 13 Circuits

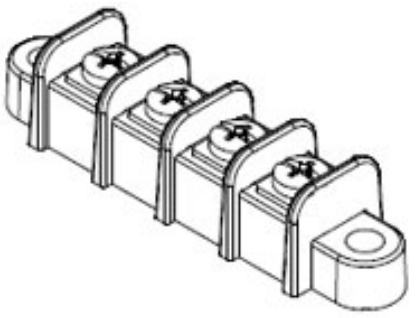

Series image - Reference only

Documents:

3D Model
Drawing (PDF)
Product Specification PS-38730-001 (PDF)
RoHS Certificate of Compliance (PDF)

General

Product Family	Terminal Blocks
Series	38740
Application	N/A
Component Type	One Piece
Overview	Beau™ Barrier Strips
Product Name	Fixed Mount Barrier
Type	Barrier Strip
UPC	800756319759

Physical

Circuits (Loaded)	13
Circuits (maximum)	13
Color - Resin	Black
Entry Angle	Horizontal
Lock to Mating Part	No
Material - Metal	Brass
Material - Plating Mating	Tin
Material - Plating Termination	Tin
Material - Resin	Polyester Alloy
Number of Rows	1
Orientation	Horizontal
PC Tail Length	5.50mm
PCB Retention	Yes
PCB Thickness - Recommended	2.40mm
Panel Mount	No
Pitch - Mating Interface	11.11mm
Pitch - Termination Interface	11.11mm
Polarized to Mating Part	No
Stackable	No
Temperature Range - Operating	-40°C to +130°C
Wire Size AWG	14, 16, 18, 20, 22
Wire Size mm²	0.50 - 1.50

Electrical

Current - Maximum per Contact	15A
Voltage - Maximum	300V

Material Info

Old Part Number	74513

Reference - Drawing Numbers

Product Specification	PS-38730-001
Sales Drawing	SD-38740-002

EU RoHS
ELV and RoHS Compliant
REACH SVHC
Not Reviewed
Low-Halogen Status
Not Reviewed

China RoHS

Need more information on product environmental compliance?

Email productcompliance@molex.com
For a multiple part number RoHS Certificate of Compliance, click here

Please visit the Contact Us section for any non-product compliance questions.

Search Parts in this Series
38740Series

This document was generated on 10/13/2014

PLEASE CHECK WWW.MOLEX.COM FOR LATEST PART INFORMATION