This document was generated on 04/23/2010

PLEASE CHECK WWW.MOLEX.COM FOR LATEST PART INFORMATION

Part Number: 0387112203

Status: Active

Description: 9.53mm (.375") Pitch Beau™ PCB Terminal Strip, Low Profile, Wire Wrap Terminal, 3 Circuits



Series image - Reference only

Documents:

Drawing (PDF)

RoHS Certificate of Compliance (PDF)

Product Specification PS-38710-001 (PDF)

General

Product Family	Terminal Blocks
Series	38711
Application	Wire-to-Board
Component Type	One Piece
Product Name	Fixed Mount Barrier
Type	Barrier Strip

Physical

Circuits (Loaded)	3
Circuits (maximum)	3
Color - Resin	Black
Entry Angle	Horizontal
Lock to Mating Part	None
Material - Metal	Brass
Material - Plating Mating	Tin
Material - Plating Termination	Tin
Material - Resin	Polyester
Number of Rows	1
Orientation	Horizontal
PC Tail Length (in)	0.470 In
PC Tail Length (mm)	11.90 mm
PCB Retention	Yes
Panel Mount	No
Pitch - Mating Interface (in)	0.375 In
Pitch - Mating Interface (mm)	9.53 mm
Pitch - Term. Interface (in)	0.375 In
Pitch - Term. Interface (mm)	9.53 mm
Polarized to Mating Part	No
Shrouded	Dual-Barrier
Stackable	No
Surface Mount Compatible (SMC)	No
Temperature Range - Operating	-40°C to +130°C
Termination Interface: Style	Screw or Lug
Wire Size AWG	14, 16, 18, 20, 22
Wire Size mm²	0.50 - 1.50

Electrical

Current - Maximum per Contact	15A
Voltage - Maximum	300V

Solder Process Data

Lead-free Process Capability	Wave Capable (TH only)

Material Info

Old Part Number	71703

Reference - Drawing Numbers

EU RoHS
ELV and RoHS Compliant
REACH SVHC
Not Reviewed
Halogen-Free Status
Not Reviewed

China RoHS

Need more information on product environmental compliance?

Email productcompliance@molex.com
For a multiple part number RoHS Certificate of Compliance, click here

Please visit the Contact Us section for any non-product compliance questions.

Search Parts in this Series
38711Series

Product Specification	PS-38710-001
Sales Drawing	SD-38711-003

This document was generated on 04/23/2010

PLEASE CHECK WWW.MOLEX.COM FOR LATEST PART INFORMATION

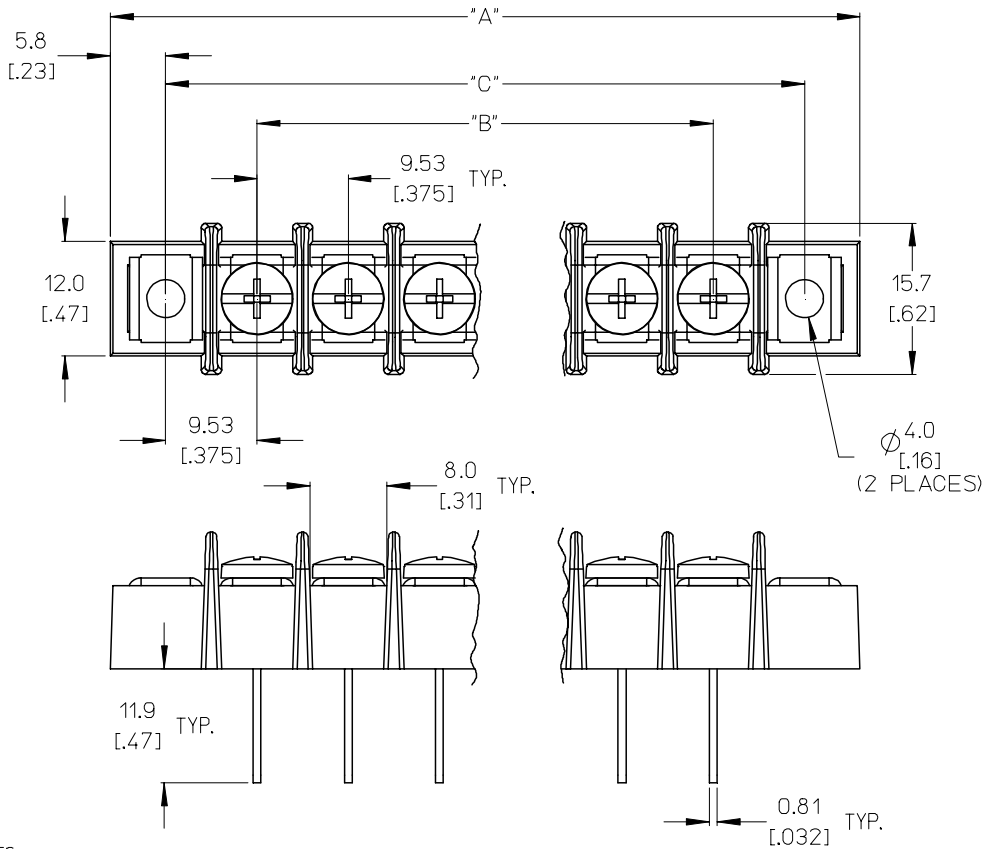

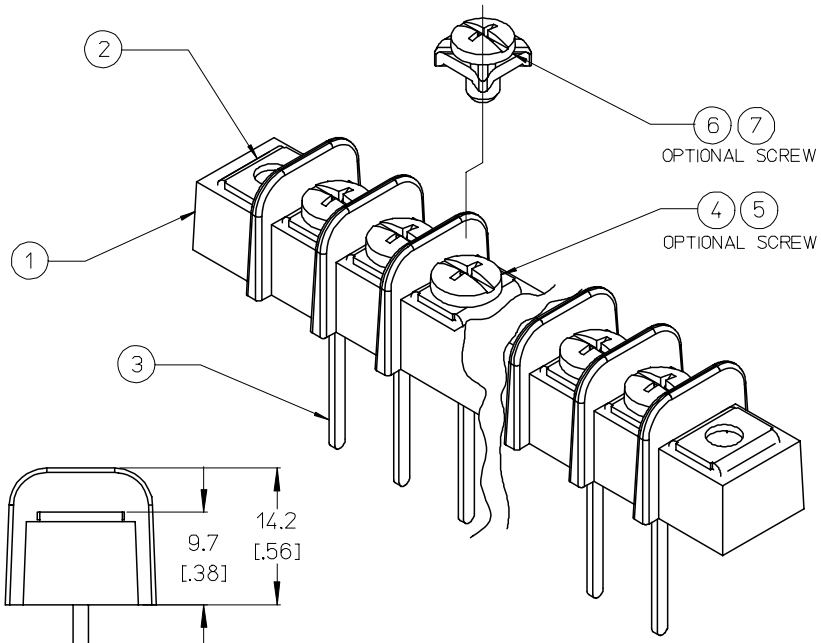

NOTES:

1. MATERIAL: SEE TABLE
2. FINISHES: SEE TABLE
3. INCH DIMENSIONS ARE SHOWN IN BRACKETS [.XXX].
4. "XX" REFERS TO NUMBER OF CIRCUITS.
5. ASSEMBLY IS ROHS COMPLIANT.

ITEM	QTY.	DESCRIPTION	MATERIAL	FINISH
7	XX	#6-32 PH/SLOTTED SCREW W/ WASHER (OPT -49,-50)	BRASS	NICKEL PLATE
6	XX	#6-32 PH/SLOTTED SCREW W/ WASHER (OPT -50)	STEEL	ZN, CLEAR CHROMATE
5	XX	#6-32 PH/SLOTTED SCREW (OPT -49)	BRASS	NICKEL PLATE
4	XX	#6-32 PH/SLOTTED SCREW (STANDARD)	STEEL	ZN, CLEAR CHROMATE
3	XX	TERMINAL, WW	BRASS	TIN PLATE
2	2	MOUNTING PLATE	BRASS	NICKEL PLATE
1	1	INSULATOR	PBT	BLACK

INITIAL RELEASE
EC NO: ETC2007-0344 2007/04/10
DRWN: CLYORK 2007/04/27
CH'KD: JMACNEIL 2007/04/30
APPR: JMACNEIL
DESCRIPTION
REV A

QUALITY SYMBOLS
▼=0
▽=0

GENERAL TOLERANCES (UNLESS SPECIFIED)

	mm	INCH
4 PLACES	± ---	± ---
3 PLACES	± ---	± .005
2 PLACES	± 0.13	± .01
1 PLACE	± 0.3	± ---
ANGULAR ± 2 °		

DRAFT WHERE APPLICABLE MUST REMAIN WITHIN DIMENSIONS

DIMENSION STYLE: MM/IN
SCALE: 2:1
DESIGN UNITS: INCH
THIRD ANGLE PROJECTION

DRAWN BY: C. YORK DATE: 2007/03/20
CHECKED BY: JMACNEIL DATE: 2007/03/20
APPROVED BY: JMACNEIL DATE: 2007/03/20

TITLE: 9.53MM [.375] SR BTS, WW ASSY, LOW PROFILE

MOLEX INCORPORATED

MATERIAL NO.: SEE SHT. 2
DOCUMENT NO.: SD-38711-003
SHEET NO.: 1 OF 2
SIZE: B

THIS DRAWING CONTAINS INFORMATION THAT IS PROPRIETARY TO MOLEX INCORPORATED AND SHOULD NOT BE USED WITHOUT WRITTEN PERMISSION

MATERIAL NO. (OPT -49,-50)	MATERIAL NO. (OPT -49)	MATERIAL NO. (OPT -50)	MATERIAL NO. (STANDARD)	NUMBER OF CIRCUITS "XX"	DIM. "A"	DIM. "B"	DIM. "C"
38719-0466	38711-2802	38711-3402	38711-2202	02	40.2 [1.58]	9.53 [.375]	28.6 [1.13]
	38711-2803	38711-3403	38711-2203	03	49.7 [1.96]	19.05 [.750]	38.1 [1.50]
38719-0614	38711-2804	38711-3404	38711-2204	04	59.2 [2.33]	28.58 [1.125]	47.6 [1.88]
	38711-2805	38711-3405	38711-2205	05	68.7 [2.71]	38.10 [1.500]	57.2 [2.25]
38719-0467	38711-2806	38711-3406	38711-2206	06	78.3 [3.08]	47.63 [1.875]	66.7 [2.63]
38719-0468	38711-2807	38711-3407	38711-2207	07	87.8 [3.46]	57.15 [2.250]	76.2 [3.00]
	38711-2808	38711-3408	38711-2208	08	97.3 [3.83]	66.68 [2.625]	85.7 [3.38]
38719-0469	38711-2809	38711-3409	38711-2209	09	106.8 [4.21]	76.20 [3.000]	95.3 [3.75]
	38711-2810	38711-3410	38711-2210	10	116.4 [4.58]	85.73 [3.375]	104.8 [4.13]
	38711-2811	38711-3411	38711-2211	11	125.9 [4.96]	95.25 [3.750]	114.3 [4.50]
	38711-2812	38711-3412	38711-2212	12	135.4 [5.33]	104.78 [4.125]	123.8 [4.88]
	38711-2813	38711-3413	38711-2213	13	144.9 [5.71]	114.30 [4.500]	133.4 [5.25]
	38711-2814	38711-3414	38711-2214	14	154.5 [6.08]	123.83 [4.875]	142.9 [5.63]
	38711-2815	38711-3415	38711-2215	15	164.0 [6.46]	133.35 [5.250]	152.4 [6.00]
	38711-2816	38711-3416	38711-2216	16	173.5 [6.83]	142.88 [5.625]	161.9 [6.38]
	38711-2817	38711-3417	38711-2217	17	183.0 [7.21]	152.40 [6.000]	171.5 [6.75]
	38711-2818	38711-3418	38711-2218	18	192.6 [7.58]	161.93 [6.375]	181.0 [7.13]
	38711-2819	38711-3419	38711-2219	19	202.1 [7.96]	171.45 [6.750]	190.5 [7.50]
	38711-2820	38711-3420	38711-2220	20	211.6 [8.33]	180.98 [7.125]	200.0 [7.88]
	38711-2821	38711-3421	38711-2221	21	221.1 [8.71]	190.50 [7.500]	209.6 [8.25]
	38711-2822	38711-3422	38711-2222	22	230.7 [9.08]	200.03 [7.875]	219.1 [8.63]
	38711-2823	38711-3423	38711-2223	23	240.2 [9.46]	209.55 [8.250]	228.6 [9.00]
	38711-2824	38711-3424	38711-2224	24	249.7 [9.83]	219.08 [8.625]	238.1 [9.38]
	38711-2825	38711-3425	38711-2225	25	259.2 [10.21]	228.60 [9.000]	247.7 [9.75]
	38711-2826	38711-3426	38711-2226	26	268.8 [10.58]	238.13 [9.375]	257.2 [10.13]

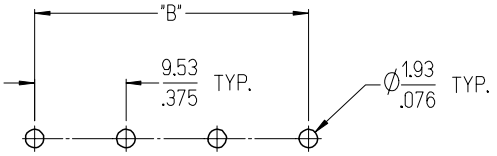

RECOMMENDED PCB LAYOUT

SEE SHEET 1
EC NO: ETC2007-0344 2007/04/10
DRWN: CLYORK 2007/04/27
CH'KD: JMACNEIL
APPR: JMACNEIL 2007/04/30
DESCRIPTION
REV
A

QUALITY SYMBOLS
▼=0
▽=0

GENERAL TOLERANCES (UNLESS SPECIFIED)

	mm	INCH
4 PLACES	± ---	± ---
3 PLACES	± ---	± .005
2 PLACES	± 0.13	± .01
1 PLACE	± 0.3	± ---
ANGULAR ± 2 °		

DRAFT WHERE APPLICABLE MUST REMAIN WITHIN DIMENSIONS

DIMENSION STYLE: MM/IN
SCALE: 2:1
DESIGN UNITS: INCH
THIRD ANGLE PROJECTION

DRAWN BY: C. YORK DATE: 2007/03/20
CHECKED BY: JMACNEIL DATE: 2007/03/20
APPROVED BY: JMACNEIL DATE: 2007/03/20

TITLE: 9.53MM [.375] SR BTS, WW ASSY, LOW PROFILE

MOLEX INCORPORATED

MATERIAL NO.: SEE CHART
DOCUMENT NO.: SD-38711-003
SHEET NO.: 2 OF 2
SIZE: B

THIS DRAWING CONTAINS INFORMATION THAT IS PROPRIETARY TO MOLEX INCORPORATED AND SHOULD NOT BE USED WITHOUT WRITTEN PERMISSION