38 3855

Multimodul™ connectors, pitch 2.5 mm

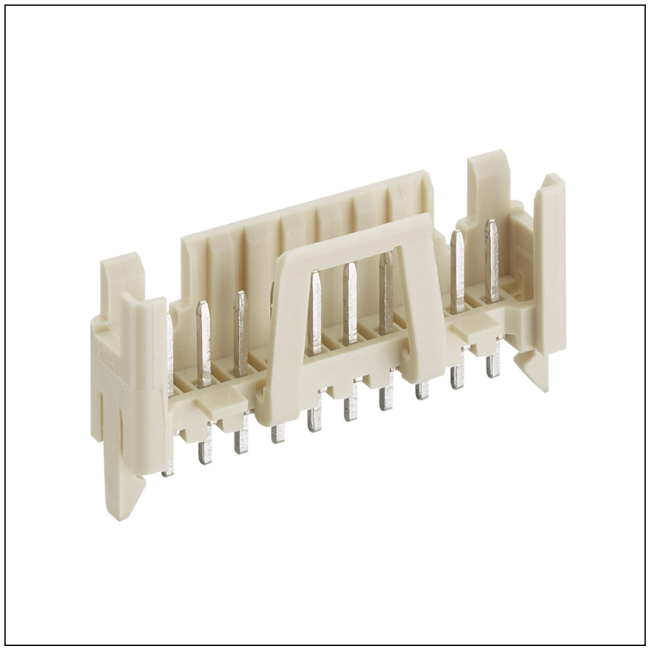

Multimodul™ pin header, upright, with locking latch, with retaining hooks and cut-outs for 3801

State: Phasing out

Approvals:

38 3855

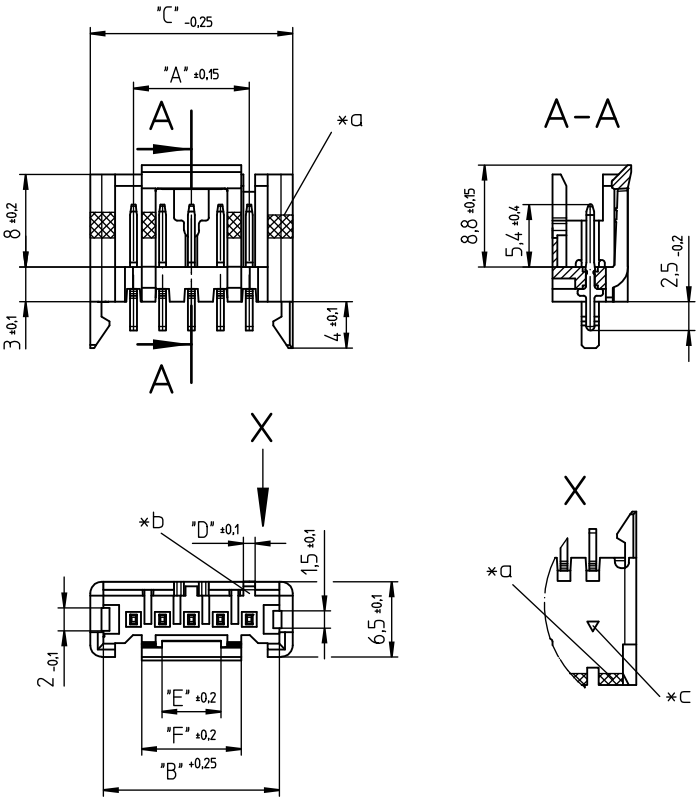

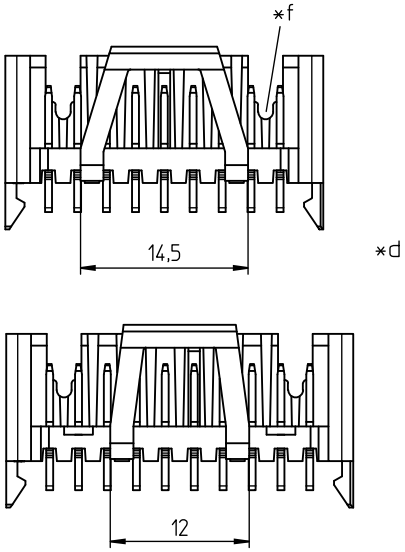

Environmental conditions

Temperature range	-40 °C/+120 °C [1]

[1] upper limit temperature (insulating body) RTI (electrical) of the UL Yellow Card

Materials

Insulating body	PA GF, V-0 according to UL94 [1]
Contact pin	CuZn, pre-nickel and tin-plated

[1] component glow wire resistant (GWT 750 °C), testing acc. to IEC 60695-2-11, assessment acc. to IEC 60335-1 (flame < 2 s)

Mechanical data

Further data	proposed keyings on request

Electrical data (at T_{amb} 20 °C)

Rated current	3 A (T_U 60 °C)
Rated voltage	160 V AC
Material group	IIIa (IEC)/2 (UL) (CTI ≥ 250)
Creepage distance	1,9 mm
Clearance	1,9 mm
Insulation resistance	> 1 GΩ

Associated products

Counterparts
3801

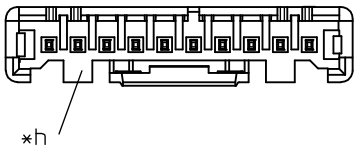

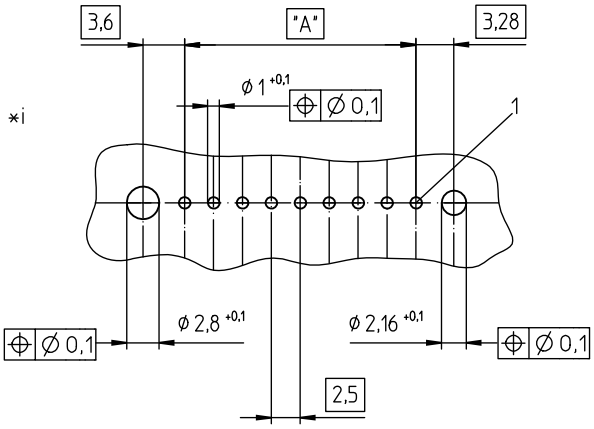

*a color keying strip
*b keying groove
*c marking contact 1
*d shape of locking latch depending on number of poles
*f recess for counterpart
*g 2 supports from 10 poles on
*h printed circuit board layout, solder side view

38 3855

Designation	Pole Number	PU (Pieces)	MDQ (Pieces)	Dimensions					
				A (mm)	B (mm)	C (mm)	D (mm)	E (mm)	F (mm)
3855 02	2	1000	5000	2.5	7.7	10.0	1.5/1.0 *g	1.3	3.6
3855 03	3	1000	5000	5.0	10.2	12.5	1.5/1.0 *g	2.6	6.1
3855 04	4	1000	5000	7.5	12.7	15.0	1.0	5.1	8.6
3855 05	5	1000	5000	10.0	15.2	17.5	1.0	5.1	8.6
3855 06	6	500	5000	12.5	17.7	20.0	1.0	5.1	8.6
3855 07	7	500	5000	15.0	20.2	22.5	1.0	5.1	8.6
3855 08	8	500	5000	17.5	22.7	25.0	1.0	5.1	8.6
3855 09	9	500	5000	20.0	25.2	27.5	1.0	5.1	8.6
3855 10	10	500	5000	22.5	27.7	30.0	1.0	5.1	8.6
3855 11	11	500	5000	25.0	30.2	32.5	1.0	5.1	8.6
3855 12	12	500	5000	27.5	32.7	35.0	1.0	5.1	8.6
3855 13	13	500	5000	30.0	35.2	37.5	1.0	5.1	8.6
3855 14	14	500	5000	32.5	37.7	40.0	1.0	5.1	8.6
3855 15	15	500	5000	35.0	40.2	42.5	1.0	5.1	8.6
3855 16	16	500	5000	37.5	42.7	45.0	1.0	5.1	8.6
3855 17	17	500	5000	40.0	45.2	47.5	1.0	5.1	8.6
3855 18	18	500	5000	42.5	47.7	50.0	1.0	5.1	8.6
3855 19	19	500	5000	45.0	50.2	52.5	1.0	5.1	8.6
3855 20	20	500	5000	47.5	52.7	55.0	1.0	5.1	8.6

Designation to be completed by further details (e.g. for keying, color or material options).

Packaging:
in bulk, in a cardboard box