38 3821

Multimodul™ connectors, pitch 2.5 mm

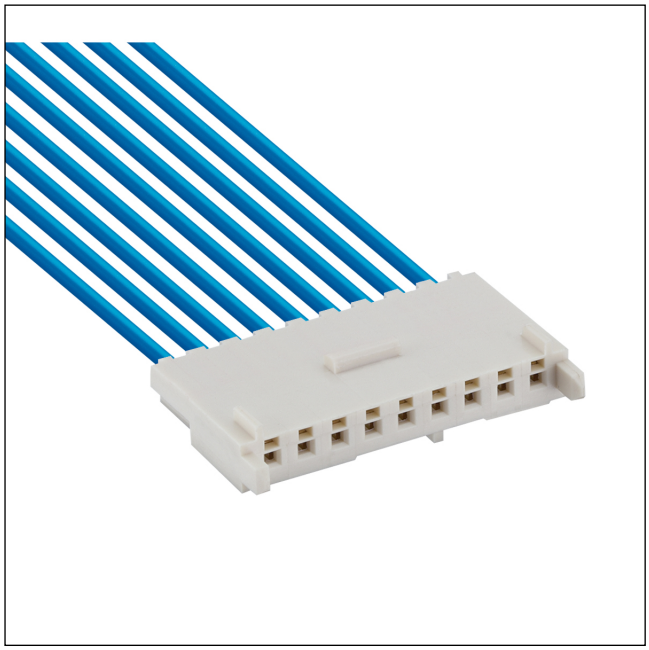

Multimodul™ connector for indirect mating, insulation displacement technology (IDT), with insulator crimp as strain relief

State: Phasing out

Approvals:

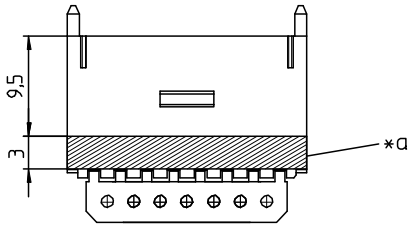

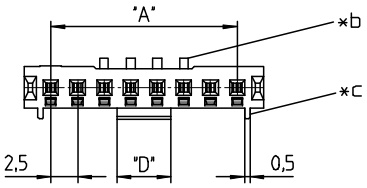

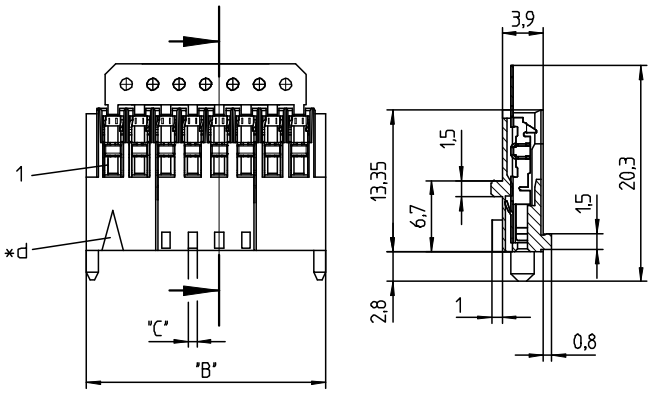

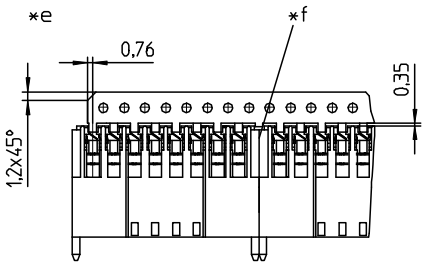

*a color keying strip
*b keying nose
*c guide rib
*d marking contact 1
*e delivery on holding strap
*f no contact spring between connectors

Environmental conditions

Temperature range	-40 °C/+120 °C

Materials

Insulating body	PBT GF, V-0 according to UL94 – 3821 ... 00 PA GF, V-0 according to UL94 – 3821 ... 30[1]
Contact spring	CuSn, tin-plated

[1] 30: component glow wire resistant (GWT 750 °C), testing acc. to IEC 60695-2-11, assessment acc. to IEC 60335-1 (flame < 2 s)

Mechanical data

Insertion force/contact	≤ 4,0 N
Withdrawal force/contact	≥ 0,5 N
Further data	proposed keyings on request

Connectable conductors for IDT area

Section min.	0,22 mm²
Section max.	0,35 mm²
Insulation diameter	1,5 mm
Approved cables	at www.lumberg.com

Electrical data (at T_{amb} 20 °C)

Rated current	3 A
Rated voltage	63 V AC (Verschmutzungsgrad 3) 200 V AC (Verschmutzungsgrad 2)
Material group	IIIa (CTI ≥ 175) – 3821 ... 00 IIIa (CTI ≥ 250) – 3821 ... 30
Creepage distance	≥ 2,0 mm
Clearance	≥ 2,0 mm
Insulation resistance	> 1 GΩ

Associated products

Counterparts
3850 3851 3852
3853 8385 A 01

Harnessing equipment
KHP38

38 3821

Designation	Pole Number	PU (Pieces)	MDQ (Pieces)	Dimensions			
				A (mm)	B (mm)	C (mm)	D (mm)
3821 02	2	7500	15000	2.5	7.5	1.3	1.20
3821 03	3	6000	12000	5.0	10.0	1.3	3.15
3821 04	4	4500	9000	7.5	12.5	0.8	5.00
3821 05	5	3750	7500	10.0	15.0	0.8	5.00
3821 06	6	3000	6000	12.5	17.5	0.8	5.00
3821 07	7	3000	6000	15.0	20.0	0.8	5.00
3821 08	8	2250	6750	17.5	22.5	0.8	5.00
3821 09	9	2250	6750	20.0	25.0	0.8	5.00
3821 10	10	2250	6750	22.5	27.5	0.8	5.00
3821 11	11	1500	6000	25.0	30.0	0.8	5.00
3821 12	12	1500	6000	27.5	32.5	0.8	5.00
3821 13	13	1500	6000	30.0	35.0	0.8	5.00
3821 14	14	1500	6000	32.5	37.5	0.8	5.00
3821 15	15	1500	6000	35.0	40.0	0.8	5.00
3821 16	16	750	5250	37.5	42.5	0.8	5.00
3821 17	17	750	5250	40.0	45.0	0.8	5.00
3821 18	18	750	5250	42.5	47.5	0.8	5.00
3821 19	19	750	5250	45.0	50.0	0.8	5.00
3821 20	20	750	5250	47.5	52.5	0.8	5.00

Designation to be completed by further details (e.g. for keying, color or material options).

Packaging:
on a holding straß, in a foil bag strap, in a cardboard box