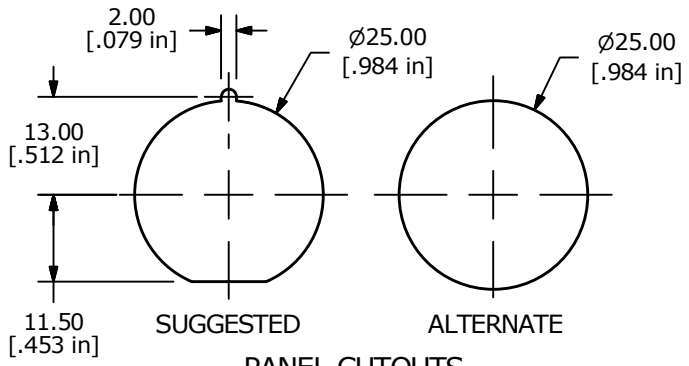

PANEL CUTOUTS

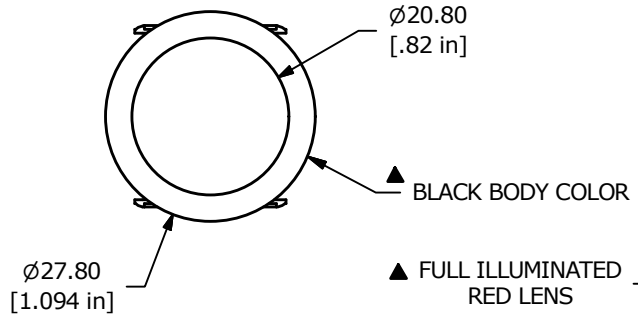



▲ SWITCH FUNCTION	
POS. 1	POS. 2
	
OFF	ON
OPEN	1-3, 2

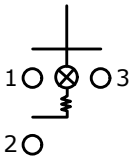

CIRCUIT: SPST

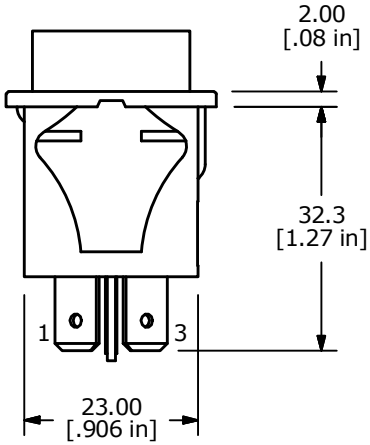

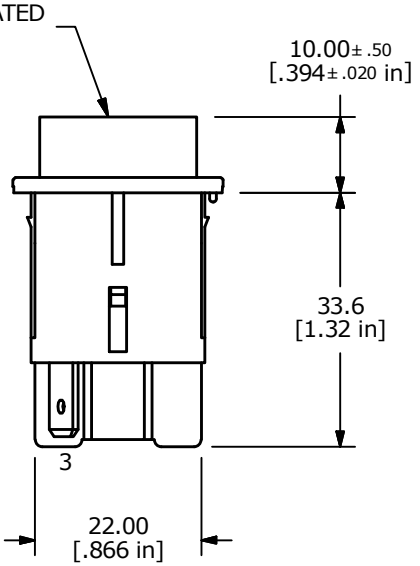

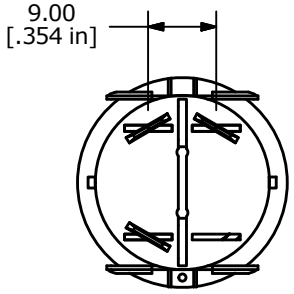

NOTE:
1. ALL DIMENSIONS IN MM [INCH]
2. GENERAL TOLERANCE: X.X = ±0.4
   X.XX = ±0.25
3. TERMINAL NO'S FOR REFERENCE ONLY.
▲4. CONTACT RATINGS:
   ANSI/UL 1054 AND CAN/CSA C22.2 NO.55(E194579)
   16A 125VAC [UR,cUR]
   1/2HP 125VAC, 3/4HP250VAC [UR,cUR]
   EN 61058-1: 2002:
   16(6)A 250V~ 1E4 T125/55 [ENEC14, SEMKO]
   10(4)A 250V~ 5E4 T125/55 [ENEC14, SEMKO]
5. CONTACT RESISTANCE: 35mΩ MAX. INITIAL @ 50VAC
6. INSULATION RESISTANCE: 100MΩ @ 500VDC
7. DIELECTRIC STRENGTH: 1500VAC FOR 1 MINUTE
8. ELECTRICAL LIFE: 6,000 CYCLES [UR,cUR]
   10,000 CYCLES [VDE]
   50,000 CYCLES [VDE]
9. ▲ DENOTE CRITICAL PARAMETER
10. 2002/95/EC (ROHS) COMPLIANT
▲11. ILLUMINATION VOLTAGE: 24V

REV	PCR NO	DESCRIPTION	DATE	BY
A	22278	RELEASE TO PRODUCTION	4/20/16	MW

THE INFORMATION CONTAINED IN THIS DOCUMENT IS PROPRIETARY TO E-SWITCH AND IS NOT TO BE COPIED OR TRANSFERRED

E•SWITCH®

TITLE PR141C1000-115

SCALE	DATE	DR	DWG	REV
1:1	4/20/2016	MW	38-PR141C1000115	A