This document was generated on 05/21/2010

PLEASE CHECK WWW.MOLEX.COM FOR LATEST PART INFORMATION

Part Number: 0038001394
Status: Active
Overview: kk
Description: 2.54mm (.100") Pitch KK® PC Board Connector, Bottom Entry, with Cat Ear Terminal, 4 Circuits

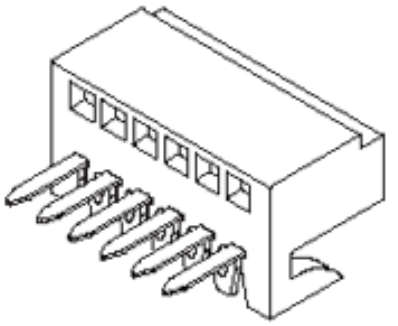

Series image - Reference only

Documents:

3D Model	Product Specification PS-10-07 (PDF)
Drawing (PDF)	Product Specification PS-99020-0088 (PDF)
Drawing (PDF)	RoHS Certificate of Compliance (PDF)

Agency Certification

CSA	LR19980
UL	E29179

General

Product Family	PCB Receptacles
Series	4455
Application	Board-to-Board
Overview	kk
Product Name	KK®

Physical

Circuits (Loaded)	4
Color - Resin	Natural (White)
Flammability	94V-0
Glow-Wire Compliant	No
Guide to Mating Part	No
Keying to Mating Part	None
Lock to Mating Part	No
Material - Metal	Phosphor Bronze
Material - Plating Mating	Tin
Material - Plating Termination	Tin
Material - Resin	Nylon
Number of Rows	1
Orientation	Bottom Entry
PC Tail Length (in)	0.142 In
PC Tail Length (mm)	3.60 mm
PCB Locator	No
PCB Retention	None
PCB Thickness Recommended (in)	0.062 In
PCB Thickness Recommended (mm)	1.60 mm
Packaging Type	Tray
Pitch - Mating Interface (in)	0.100 In
Pitch - Mating Interface (mm)	2.54 mm
Plating min: Mating (µin)	40
Plating min: Mating (µm)	1.00
Plating min: Termination (µin)	40
Plating min: Termination (µm)	1.00
Polarized to PCB	No
Temperature Range - Operating	0°C to +75°C
Termination Interface: Style	Through Hole

Electrical

Current - Maximum per Contact	2.5A
Grounding to PCB	No

EU RoHS
ELV and RoHS Compliant
REACH SVHC
Not Reviewed
Halogen-Free Status
Not Reviewed

China RoHS

Need more information on product environmental compliance?

Email productcompliance@molex.com
For a multiple part number RoHS Certificate of Compliance, click here

Please visit the Contact Us section for any non-product compliance questions.

Search Parts in this Series
4455Series

Mates With
42153 KK® Wire-to-Board Header, 4094 KK® Wire-to-Board Header, 42376 KK® Header, 42375 KK® Header, 42377 KK® Header, 42152 KK® Wire-to-Board Header, 4030 KK® Wire-to-Board Header

Voltage - Maximum	250V

Solder Process Data

Duration at Max. Process Temperature (seconds)	5
Lead-free Process Capability	Wave Capable (TH only)
Max. Cycles at Max. Process Temperature	1
Process Temperature max. C	235

Material Info

Old Part Number	A-4455-BH04F(P909)

Reference - Drawing Numbers

Packaging Specification	PK-44646-001
Product Specification	PS-10-07, PS-99020-0088
Sales Drawing	SDA-4455

This document was generated on 05/21/2010

PLEASE CHECK WWW.MOLEX.COM FOR LATEST PART INFORMATION

4455

NO. OF CKTS.	DIM. A	DIM. B
1	(2.44± .15) .096± .006	—
2	(4.98± .15) .196± .006	(2.54 ± .10) .100 ± .004
3	(7.52± .15) .296±.006	(5.08 ± .10) .200 ± .004
4	(10.06± .15) .396 ±.006	(7.62 ± .10) .300 ± .004
5	(12.60± .18) .496 ±.007	(10.16± .13) .400 ± .005
6	(15.14± .18) .596± .007	(12.70± .13) .500 ± .005
7	(17.68±.20) .696 ± .008	(15.24± .15) .600 ±.006
8	(20.22±.20) .796 ±.008	(17.78± .15) .700 ±.006
9	(22.76±.20) .896 ±.008	(20.32± .15) .800 ±.006
10	(25.30±.25) .996± .010	(22.86±.20) .900±.008
11	(27.84±.25) 1.096± .010	(25.40 ±.20) 1.000±.008
12	(30.38 ±.25) 1.196± .010	(27.94±.20) 1.100±.008
13	(32.92 ± .25) 1.296±.010	(30.48 ±.20) 1.200±.008
14	(35.46 ±.25) 1.396± .010	(33.02 ±.20) 1.300±.008
15	(38.00± .28) 1.496± .011	(35.56±.23) 1.400±.009
16	(40.54± .28) 1.596± .011	(38.10± .23) 1.500±.009
17	(43.08± .28) 1.696± .011	(40.64± .23) 1.600±.009
18	(45.62± .28) 1.796± .011	(43.18± .23) 1.700±.009
19	(48.16± .28) 1.896± .011	(45.72±.23) 1.800±.009
20	(50.70± .30) 1.996± .012	(48.26± .25) 1.900± .010
21	(53.24± .30) 2.096± .012	(50.80± .25) 2.000± .010
22	(55.78 ± .30) 2.196± .012	(53.34± .25) 2.100± .010
23	(58.32 ± .30) 2.296 ± .012	(55.88± .25) 2.200 ± .010
24	(60.86 ± .30) 2.396 ± .012	(58.42 ± .30) 2.300± .012
25	(63.40 ± .38) 2.496 ± .015	(60.96 ± .30) 2.400 ± .012

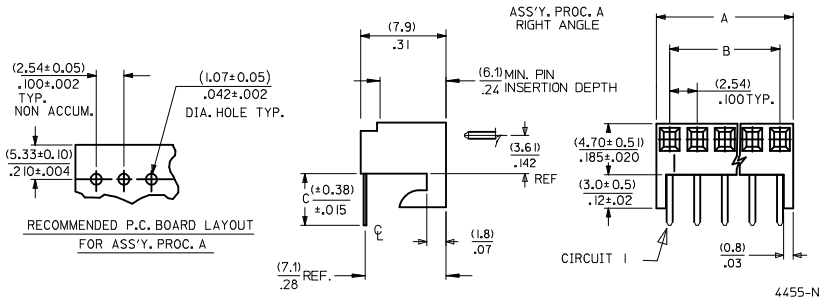

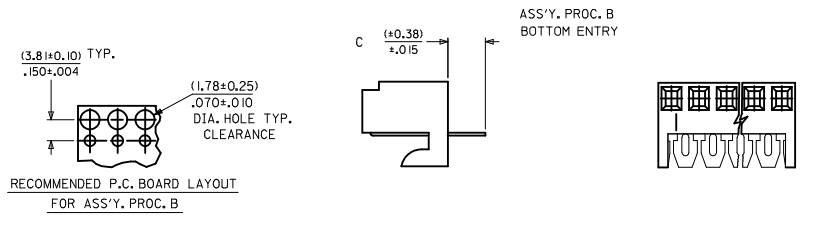

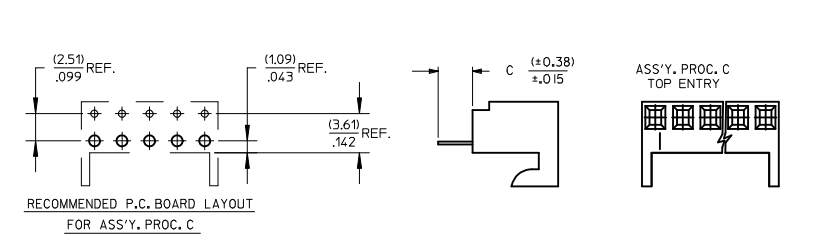

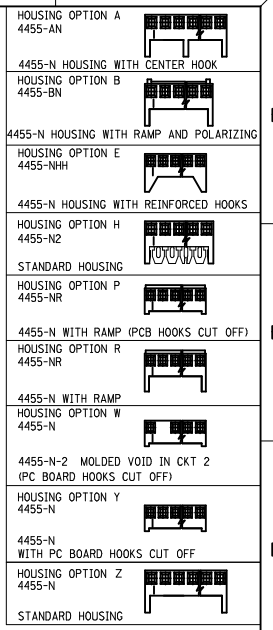

NOTES:

1. MATERIAL: NYLON, UL 94V-0, COLOR: WHITE
2. FINISH:
   *(208) - SELECT GOLD: (0.00038)/.000015 MIN., SELECT TIN: (0.00254)/.000100 MIN. OVERALL NICKEL UNDERPLATE: (0.00127)/.000050 MIN.
   *(228) - SELECT GOLD: (0.00076)/.000030 MIN., SELECT TIN: (0.00254)/.000100 MIN. OVERALL NICKEL UNDERPLATE: (0.00127)/.000050 MIN.
   (231) - SELECT GOLD: (0.00127)/.000050 MIN., SELECT TIN: (0.00254)/.000100 MIN. OVERALL NICKEL UNDERPLATE: (0.00127)/.000050 MIN.
   (565) - SELECT GOLD: (0.00051)/.000020 MIN., OVERALL NICKEL: (0.00076)/.000030 MIN. OVERALL GOLD FLASH: (0.00005)/.000002 MIN.
   *(P909) - OVERALL TIN: (0.00254)/.000100 MIN.
   *THE PRIMARY SHIPPING CARTON WILL BE LABELED "COMPLIANT TO RoHS DIRECTIVE 2002/95/EC AND ELV ANNEX II OF DIRECTIVE 2000/53/EC." CARTONS WITHOUT THIS LABEL MAY CONTAIN PRODUCT WITH TIN-LEAD PLATING.
3. PARTS CONFORM TO PRODUCT SPECIFICATION PS-10-07.
4. PACKAGING: SEE CHARTS.
5. PARTS MUST CONFORM TO SOLDERABILITY SPEC 152.
6. PARTS ARE STACKABLE END TO END ON (2.54)/.100 CENTERS.
7. TYPICAL PCB THICKNESS: (1.57)/.062
8. PART CONFORMS TO CLASS B REQUIREMENTS OF COSMETIC SPECIFICATION PS-45499-002.

2-*	D7
1	D7
SHT.	REV.

REV	DESCRIPTION	DATE
D7	ADD 26-01-3099	
	EC NO: UCP2010-2172	2010/04/15
	DRWN:MKIPPER	2010/04/15
	CH'KD:JBELL	
	APPR:FSMITH	

QUALITY SYMBOLS
▼=0
Ⓒ=0

GENERAL TOLERANCES (UNLESS SPECIFIED)

	mm	INCH
4 PLACES	± ---	± ---
3 PLACES	± ---	± .010
2 PLACES	± 0.25	± .015
1 PLACE	± 0.36	± ---
ANGULAR ±1/2°		

DRAFT WHERE APPLICABLE MUST REMAIN WITHIN DIMENSIONS

DIMENSION STYLE: MM/IN
SCALE: ---
DESIGN UNITS: INCH
THIRD ANGLE PROJECTION

		DATE
DRAWN BY	SAMIEC	10/5/84
CHECKED BY	PATEL	10/5/84
APPROVED BY	LENZ	10/5/84

TITLE: KK 100 PCB ASSY 4455 SERIES DWG

MOLEX INCORPORATED

MATERIAL NO.: SEE CHART
DOCUMENT NO.: SDA-4455
SHEET NO.: 1 OF *

SIZE: B

THIS DRAWING CONTAINS INFORMATION THAT IS PROPRIETARY TO MOLEX INCORPORATED AND SHOULD NOT BE USED WITHOUT WRITTEN PERMISSION

KK 100 PCB ASSY 2-25 CKT
4455 SERIES

STANDARD PRODUCT

A-4455- * * N * * - *

ASSY PROCEDURE
A=RIGHT ANGLE
B=BOTTOM ENTRY
C=TOP ENTRY

HOUSING TYPE
A=4455-AN
B=4455-BN
E=4455-NHH
H=4455-N2
P=4455-NR (HOOKS CUT OFF)
R=4455-NR
W=4455-N-2 (HOOKS CUT OFF)
Y=4455-N (HOOKS CUT OFF)
Z=4455-N

NO OF CIRCUITS

TERMINAL TYPE

Code	Number	Material	Form
A	4316-4	Brass	Standard
B	6516-4	Phos Bronze	Standard
C	6516-5C	Phos Bronze	Cat Ear / V
D	4316-3B	Brass	Std / V
F	6516-6C	Phos Bronze	Cat Ear / V
G	4316-3	Brass	Standard
J	6516-3B	Phos Bronze	Std / V
L	6516-3C	Phos Bronze	Cat Ear / V
M	6516-4A	Phos Bronze	Cat Ear
S	30432-0200	Phos Bronze	Humpback
T	4316-4A	Brass	Cat Ear

PLATING
(SEE SHEET 1)

VOID LOCATION
NUMBER = CIRCUIT VOIDED
MULTIPLE VOIDS START WITH 51
BLANK = NONE

Assy Proc:	RIGHT ANGLE
Hooks Cut:	NO
Housing No:	4455-N
Terminal No:	4316-4(P909)
Dim C:	3.35 / .132
Plating:	P909
Packaging:	PK-44646-001
Voids:	NONE

Assy Proc:	RIGHT ANGLE
Hooks Cut:	NO
Housing No:	4455-N
Terminal No:	4316-4(565)
Dim C:	3.35 / .132
Plating:	565
Packaging:	PK-44646-001
Voids:	NONE

Ckts	Material No	Engineer Number	Material No	Engineer Number
2	22-15-2026	A-4455-AZ02A(P909)	22-16-2021	A-4455-AZ02A(565)
3	22-15-2036	A-4455-AZ03A(P909)	22-16-2031	A-4455-AZ03A(565)
4	22-15-2046	A-4455-AZ04A(P909)	22-16-2041	A-4455-AZ04A(565)
5	22-15-2056	A-4455-AZ05A(P909)	22-16-2051	A-4455-AZ05A(565)
6	22-15-2066	A-4455-AZ06A(P909)	22-16-2061	A-4455-AZ06A(565)
7	22-15-2076	A-4455-AZ07A(P909)	22-16-2071	A-4455-AZ07A(565)
8	22-15-2086	A-4455-AZ08A(P909)	22-16-2081	A-4455-AZ08A(565)
9	22-15-2096	A-4455-AZ09A(P909)	22-16-2091	A-4455-AZ09A(565)
10	22-15-2106	A-4455-AZ10A(P909)	22-16-2101	A-4455-AZ10A(565)
11	22-15-2116	A-4455-AZ11A(P909)	22-16-2111	A-4455-AZ11A(565)
12	22-15-2126	A-4455-AZ12A(P909)	22-16-2121	A-4455-AZ12A(565)
13	22-15-2136	A-4455-AZ13A(P909)	22-16-2131	A-4455-AZ13A(565)
14	22-15-2146	A-4455-AZ14A(P909)	22-16-2141	A-4455-AZ14A(565)
15	22-15-2156	A-4455-AZ15A(P909)	22-16-2151	A-4455-AZ15A(565)
16	22-15-2166	A-4455-AZ16A(P909)	22-16-2161	A-4455-AZ16A(565)
17	22-15-2176	A-4455-AZ17A(P909)	22-16-2171	A-4455-AZ17A(565)
18	22-15-2186	A-4455-AZ18A(P909)	22-16-2181	A-4455-AZ18A(565)
19	22-15-2196	A-4455-AZ19A(P909)	22-16-2191	A-4455-AZ19A(565)
20	22-15-2206	A-4455-AZ20A(P909)	22-16-2201	A-4455-AZ20A(565)
21	22-15-2216	A-4455-AZ21A(P909)	22-16-2211	A-4455-AZ21A(565)
22	22-15-2226	A-4455-AZ22A(P909)	22-16-2221	A-4455-AZ22A(565)
23	22-15-2236	A-4455-AZ23A(P909)	22-16-2231	A-4455-AZ23A(565)
24	22-15-2246	A-4455-AZ24A(P909)	22-16-2241	A-4455-AZ24A(565)
25	22-15-2256	A-4455-AZ25A(P909)	22-16-2251	A-4455-AZ25A(565)

REV:	ECR/ECN INFORMATION:	TITLE:	SHEET No.
D7	EC No.: **UCP2010-2172** DATE: **4/15/2010**	KK 100 PCB ASSY 4455 SERIES DWG	**- 2 -**

DOCUMENT NUMBER:	CREATED / REVISED BY:	CHECKED BY:	APPROVED BY:
SDA-4455	**MKIPPER**	**JBELL**	**FSMITH**

KK 100 PCB ASSY 2-25 CKT

4455 SERIES

STANDARD PRODUCT

	Assy Proc:	RIGHT ANGLE	Assy Proc:	BOTTOM ENTRY	Assy Proc:	BOTTOM ENTRY	Assy Proc:	BOTTOM ENTRY
	Hooks Cut:	NO	Hooks Cut:	NO	Hooks Cut:	NO	Hooks Cut:	NO
	Housing No:	4455-N	Housing No:	4455-N2	Housing No:	4455-N2	Housing No:	4455-N2
	Terminal No:	4316-4(208)	Terminal No:	4316-3B(P909)	Terminal No:	4316-3B(565)	Terminal No:	4316-3B(208)
	Dim C:	3.35 / .132	Dim C:	3.35 / .132	Dim C:	3.35 / .132	Dim C:	3.35 / .132
	Plating:	208	Plating:	P909	Plating:	565	Plating:	208
	Packaging:	PK-44646-001	Packaging:	PK-44646-001	Packaging:	PK-44646-001	Packaging:	PK-44646-001
	Voids:	NONE	Voids:	NONE	Voids:	NONE	Voids:	NONE
Ckts	Material No	Engineer Number	Material No	Engineer Number	Material No	Engineer Number	Material No	Engineer Number
2	22-16-2020	A-4455-AZ02A(208)	22-14-2024	A-4455-BH02D(P909)	22-17-2022	A-4455-BH02D(565)	22-17-3022	A-4455-BH02D(208)
3	22-16-2030	A-4455-AZ 03 A(208)	22-14-2034	A-4455-BH 03 D(P909)	22-17-2032	A-4455-BH 03 D(565)	22-17-3032	A-4455-BH 03 D(208)
4	22-16-2040	A-4455-AZ 04 A(208)	22-14-2044	A-4455-BH 04 D(P909)	22-17-2042	A-4455-BH 04 D(565)	22-17-3042	A-4455-BH 04 D(208)
5	22-16-2050	A-4455-AZ 05 A(208)	22-14-2054	A-4455-BH 05 D(P909)	22-17-2052	A-4455-BH 05 D(565)	22-17-3052	A-4455-BH 05 D(208)
6	22-16-2060	A-4455-AZ 06 A(208)	22-14-2064	A-4455-BH 06 D(P909)	22-17-2062	A-4455-BH 06 D(565)	22-17-3062	A-4455-BH 06 D(208)
7	22-16-2070	A-4455-AZ 07 A(208)	22-14-2074	A-4455-BH 07 D(P909)	22-17-2072	A-4455-BH 07 D(565)	22-17-3072	A-4455-BH 07 D(208)
8	22-16-2080	A-4455-AZ 08 A(208)	22-14-2084	A-4455-BH 08 D(P909)	22-17-2082	A-4455-BH 08 D(565)	22-17-3082	A-4455-BH 08 D(208)
9	22-16-2090	A-4455-AZ 09 A(208)	22-14-2094	A-4455-BH 09 D(P909)	22-17-2092	A-4455-BH 09 D(565)	22-17-3092	A-4455-BH 09 D(208)
10	22-16-2100	A-4455-AZ 10 A(208)	22-14-2104	A-4455-BH 10 D(P909)	22-17-2102	A-4455-BH 10 D(565)	22-17-3102	A-4455-BH 10 D(208)
11	22-16-2110	A-4455-AZ 11 A(208)	22-14-2114	A-4455-BH 11 D(P909)	22-17-2112	A-4455-BH 11 D(565)	22-17-3112	A-4455-BH 11 D(208)
12	22-16-2120	A-4455-AZ 12 A(208)	22-14-2124	A-4455-BH 12 D(P909)	22-17-2122	A-4455-BH 12 D(565)	22-17-3122	A-4455-BH 12 D(208)
13	22-16-2130	A-4455-AZ 13 A(208)	22-14-2134	A-4455-BH 13 D(P909)	22-17-2132	A-4455-BH 13 D(565)	22-17-3132	A-4455-BH 13 D(208)
14	22-16-2140	A-4455-AZ 14 A(208)	22-14-2144	A-4455-BH 14 D(P909)	22-17-2142	A-4455-BH 14 D(565)	22-17-3142	A-4455-BH 14 D(208)
15	22-16-2150	A-4455-AZ 15 A(208)	22-14-2154	A-4455-BH 15 D(P909)	22-17-2152	A-4455-BH 15 D(565)	22-17-3152	A-4455-BH 15 D(208)
16	22-16-2160	A-4455-AZ 16 A(208)	22-14-2164	A-4455-BH 16 D(P909)	22-17-2162	A-4455-BH 16 D(565)	22-17-3162	A-4455-BH 16 D(208)
17	22-16-2170	A-4455-AZ 17 A(208)	22-14-2174	A-4455-BH 17 D(P909)	22-17-2172	A-4455-BH 17 D(565)	22-17-3172	A-4455-BH 17 D(208)
18	22-16-2180	A-4455-AZ 18 A(208)	22-14-2184	A-4455-BH 18 D(P909)	22-17-2182	A-4455-BH 18 D(565)	22-17-3182	A-4455-BH 18 D(208)
19	22-16-2190	A-4455-AZ 19 A(208)	22-14-2194	A-4455-BH 19 D(P909)	22-17-2192	A-4455-BH 19 D(565)	22-17-3192	A-4455-BH 19 D(208)
20	22-16-2200	A-4455-AZ 20 A(208)	22-14-2204	A-4455-BH 20 D(P909)	22-17-2202	A-4455-BH 20 D(565)	22-17-3202	A-4455-BH 20 D(208)
21	22-16-2210	A-4455-AZ 21 A(208)	22-14-2214	A-4455-BH 21 D(P909)	22-17-2212	A-4455-BH 21 D(565)	22-17-3212	A-4455-BH 21 D(208)
22	22-16-2220	A-4455-AZ 22 A(208)	22-14-2224	A-4455-BH 22 D(P909)	22-17-2222	A-4455-BH 22 D(565)	22-17-3222	A-4455-BH 22 D(208)
23	22-16-2230	A-4455-AZ 23 A(208)	22-14-2234	A-4455-BH 23 D(P909)	22-17-2232	A-4455-BH 23 D(565)	22-17-3232	A-4455-BH 23 D(208)
24	22-16-2240	A-4455-AZ 24 A(208)	22-14-2244	A-4455-BH 24 D(P909)	22-17-2242	A-4455-BH 24 D(565)	22-17-3242	A-4455-BH 24 D(208)
25	22-16-2250	A-4455-AZ 25 A(208)	22-14-2254	A-4455-BH 25 D(P909)	22-17-2252	A-4455-BH 25 D(565)	22-17-3252	A-4455-BH 25 D(208)

REV:	ECR/ECN INFORMATION:	TITLE:	SHEET No.
D7	EC No.: UCP2010-2172 DATE: 4/15/2010	KK 100 PCB ASSY 4455 SERIES DWG	- 3 -

DOCUMENT NUMBER:	CREATED / REVISED BY:	CHECKED BY:	APPROVED BY:
SDA-4455	MKIPPER	JBELL	FSMITH

KK 100 PCB ASSY 2-25 CKT

4455 SERIES

	Assy Proc:	TOP ENTRY	Assy Proc:	TOP ENTRY	Assy Proc:	TOP ENTRY	Assy Proc:	RIGHT ANGLE
	Hooks Cut:	NO	Hooks Cut:	NO	Hooks Cut:	NO	Hooks Cut:	NO
	Housing No:	4455-N	Housing No:	4455-N	Housing No:	4455-N	Housing No:	4455-N
	Terminal No:	4316-4(P909)	Terminal No:	4316-4(565)	Terminal No:	4316-4(208)	Terminal No:	6516-4(P909)
	Dim C:	3.35 / .132	Dim C:	3.35 / .132	Dim C:	3.35 / .132	Dim C:	3.35 / .132
	Plating:	P909	Plating:	565	Plating:	208	Plating:	P909
	Packaging:	PK-44646-001	Packaging:	PK-44646-001	Packaging:	PK-44646-001	Packaging:	PK-44646-001
	Voids:	NONE	Voids:	NONE	Voids:	NONE	Voids:	NONE
Ckts	Material No	Engineer Number	Material No	Engineer Number	Material No	Engineer Number	Material No	Engineer Number
2	22-02-2025	A-4455-CZ02A(P909)	22-18-2023	A-4455-CZ02A(565)	22-18-2021	A-4455-CZ02A(208)	22-15-4025	A-4455-AZ02B(P909)
3	22-02-2035	A-4455-CZ 03A(P909)	22-18-2033	A-4455-CZ 03 A(565)	22-18-2031	A-4455-CZ 03 A(208)	22-15-4035	A-4455-AZ 03B(P909)
4	22-02-2045	A-4455-CZ 04A(P909)	22-18-2043	A-4455-CZ 04 A(565)	22-18-2041	A-4455-CZ 04 A(208)	22-15-4045	A-4455-AZ 04B(P909)
5	22-02-2055	A-4455-CZ 05A(P909)	22-18-2053	A-4455-CZ 05 A(565)	22-18-2051	A-4455-CZ 05 A(208)	22-15-4055	A-4455-AZ 05B(P909)
6	22-02-2065	A-4455-CZ 06A(P909)	22-18-2063	A-4455-CZ 06 A(565)	22-18-2061	A-4455-CZ 06 A(208)	22-15-4065	A-4455-AZ 06B(P909)
7	22-02-2075	A-4455-CZ 07A(P909)	22-18-2073	A-4455-CZ 07 A(565)	22-18-2071	A-4455-CZ 07 A(208)	22-15-4075	A-4455-AZ 07B(P909)
8	22-02-2085	A-4455-CZ 08 A(P909)	22-18-2083	A-4455-CZ 08 A(565)	22-18-2081	A-4455-CZ 08 A(208)	22-15-4085	A-4455-AZ 08B(P909)
9	22-02-2095	A-4455-CZ 09 A(P909)	22-18-2093	A-4455-CZ 09 A(565)	22-18-2091	A-4455-CZ 09 A(208)	22-15-4095	A-4455-AZ 09B(P909)
10	22-02-2105	A-4455-CZ 10 A(P909)	22-18-2103	A-4455-CZ 10 A(565)	22-18-2101	A-4455-CZ 10 A(208)	22-15-4105	A-4455-AZ 10B(P909)
11	22-02-2115	A-4455-CZ 11 A(P909)	22-18-2113	A-4455-CZ 11 A(565)	22-18-2111	A-4455-CZ 11 A(208)	22-15-4115	A-4455-AZ 11B(P909)
12	22-02-2125	A-4455-CZ 12 A(P909)	22-18-2123	A-4455-CZ 12 A(565)	22-18-2121	A-4455-CZ 12 A(208)	22-15-4125	A-4455-AZ 12B(P909)
13	22-02-2135	A-4455-CZ 13 A(P909)	22-18-2133	A-4455-CZ 13 A(565)	22-18-2131	A-4455-CZ 13 A(208)	22-15-4135	A-4455-AZ 13B(P909)
14	22-02-2145	A-4455-CZ 14 A(P909)	22-18-2143	A-4455-CZ 14 A(565)	22-18-2141	A-4455-CZ 14 A(208)	22-15-4145	A-4455-AZ 14B(P909)
15	22-02-2155	A-4455-CZ 15 A(P909)	22-18-2153	A-4455-CZ 15 A(565)	22-18-2151	A-4455-CZ 15 A(208)	22-15-4155	A-4455-AZ 15B(P909)
16	22-02-2165	A-4455-CZ 16 A(P909)	22-18-2163	A-4455-CZ 16 A(565)	22-18-2161	A-4455-CZ 16 A(208)	22-15-4165	A-4455-AZ 16B(P909)
17	22-02-2175	A-4455-CZ 17 A(P909)	22-18-2173	A-4455-CZ 17 A(565)	22-18-2171	A-4455-CZ 17 A(208)	22-15-4175	A-4455-AZ 17B(P909)
18	22-02-2185	A-4455-CZ 18 A(P909)	22-18-2183	A-4455-CZ 18 A(565)	22-18-2181	A-4455-CZ 18 A(208)	22-15-4185	A-4455-AZ 18B(P909)
19	22-02-2195	A-4455-CZ 19 A(P909)	22-18-2193	A-4455-CZ 19 A(565)	22-18-2191	A-4455-CZ 19 A(208)	22-15-4195	A-4455-AZ 19B(P909)
20	22-02-2205	A-4455-CZ 20 A(P909)	22-18-2203	A-4455-CZ 20 A(565)	22-18-2201	A-4455-CZ 20 A(208)	22-15-4205	A-4455-AZ 20B(P909)
21	22-02-2215	A-4455-CZ 21 A(P909)	22-18-2213	A-4455-CZ 21 A(565)	22-18-2211	A-4455-CZ 21 A(208)	22-15-4215	A-4455-AZ 21B(P909)
22	22-02-2225	A-4455-CZ 22 A(P909)	22-18-2223	A-4455-CZ 22 A(565)	22-18-2221	A-4455-CZ 22 A(208)	22-15-4225	A-4455-AZ 22B(P909)
23	22-02-2235	A-4455-CZ 23 A(P909)	22-18-2233	A-4455-CZ 23 A(565)	22-18-2231	A-4455-CZ 23 A(208)	22-15-4235	A-4455-AZ 23B(P909)
24	22-02-2245	A-4455-CZ 24 A(P909)	22-18-2243	A-4455-CZ 24 A(565)	22-18-2241	A-4455-CZ 24 A(208)	22-15-4245	A-4455-AZ 24B(P909)
25	22-02-2255	A-4455-CZ 25 A(P909)	22-18-2253	A-4455-CZ 25 A(565)	22-18-2251	A-4455-CZ 25 A(208)	22-15-4255	A-4455-AZ 25B(P909)

REV:	ECR/ECN INFORMATION:	TITLE:	SHEET No.
D7	EC No.: **UCP2010-2172** DATE: **4/15/2010**	KK 100 PCB ASSY 4455 SERIES DWG	**- 4 -**

DOCUMENT NUMBER:	CREATED / REVISED BY:	CHECKED BY:	APPROVED BY:
SDA-4455	**MKIPPER**	**JBELL**	**FSMITH**

TEMPLATE FILENAME: PRODUCT_SPEC[SIZE_A](V.1).DOC

KK 100 PCB ASSY 2-25 CKT

4455 SERIES

	Assy Proc:	RIGHT ANGLE	Assy Proc:	RIGHT ANGLE	Assy Proc:	BOTTOM ENTRY	Assy Proc:	BOTTOM ENTRY
	Hooks Cut:	NO	Hooks Cut:	NO	Hooks Cut:	NO	Hooks Cut:	NO
	Housing No:	4455-N	Housing No:	4455-N	Housing No:	4455-N2	Housing No:	4455-N2
	Terminal No:	6516-4(565)	Terminal No:	6516-4(208)	Terminal No:	6516-3B(565)	Terminal No:	6516-3B(208)
	Dim C:	3.35 / .132	Dim C:	3.35 / .132	Dim C:	3.35 / .132	Dim C:	3.35 / .132
	Plating:	565	Plating:	208	Plating:	565	Plating:	208
	Packaging:	PK-44646-001	Packaging:	PK-44646-001	Packaging:	PK-44646-001	Packaging:	PK-44646-001
	Voids:	NONE	Voids:	NONE	Voids:	NONE	Voids:	NONE
Ckts	Material No	Engineer Number	Material No	Engineer Number	Material No	Engineer Number	Material No	Engineer Number
2	22-16-2024	A-4455-AZ02B(565)		A-4455-AZ02B(208)	22-17-2021	A-4455-BH02J(565)		A-4455-BH02J(208)
3	22-16-2034	A-4455-AZ 03 B(565)		A-4455-AZ 03 B(208)	22-17-2031	A-4455-BH 03 J(565)		A-4455-BH 03 J(208)
4	22-16-2044	A-4455-AZ 04 B(565)		A-4455-AZ 04 B(208)	22-17-2041	A-4455-BH 04 J(565)		A-4455-BH 04 J(208)
5	22-16-2054	A-4455-AZ 05 B(565)		A-4455-AZ 05 B(208)	22-17-2051	A-4455-BH 05 J(565)		A-4455-BH 05 J(208)
6	22-16-2064	A-4455-AZ 06 B(565)		A-4455-AZ 06 B(208)	22-17-2061	A-4455-BH 06 J(565)		A-4455-BH 06 J(208)
7	22-16-2074	A-4455-AZ 07 B(565)		A-4455-AZ 07 B(208)	22-17-2071	A-4455-BH 07 J(565)		A-4455-BH 07 J(208)
8	22-16-2084	A-4455-AZ 08 B(565)		A-4455-AZ 08 B(208)	22-17-2081	A-4455-BH 08 J(565)		A-4455-BH 08 J(208)
9	22-16-2094	A-4455-AZ 09 B(565)		A-4455-AZ 09 B(208)	22-17-2091	A-4455-BH 09 J(565)		A-4455-BH 09 J(208)
10	22-16-2104	A-4455-AZ 10 B(565)		A-4455-AZ 10 B(208)	22-17-2101	A-4455-BH 10 J(565)		A-4455-BH 10 J(208)
11	22-16-2114	A-4455-AZ 11 B(565)		A-4455-AZ 11 B(208)	22-17-2111	A-4455-BH 11 J(565)		A-4455-BH 11 J(208)
12	22-16-2124	A-4455-AZ 12 B(565)		A-4455-AZ 12 B(208)	22-17-2121	A-4455-BH 12 J(565)		A-4455-BH 12 J(208)
13	22-16-2134	A-4455-AZ 13 B(565)		A-4455-AZ 13 B(208)	22-17-2131	A-4455-BH 13 J(565)		A-4455-BH 13 J(208)
14	22-16-2144	A-4455-AZ 14 B(565)		A-4455-AZ 14 B(208)	22-17-2141	A-4455-BH 14 J(565)		A-4455-BH 14 J(208)
15	22-16-2154	A-4455-AZ 15 B(565)		A-4455-AZ 15 B(208)	22-17-2151	A-4455-BH 15 J(565)		A-4455-BH 15 J(208)
16	22-16-2164	A-4455-AZ 16 B(565)		A-4455-AZ 16 B(208)	22-17-2161	A-4455-BH 16 J(565)		A-4455-BH 16 J(208)
17	22-16-2174	A-4455-AZ 17 B(565)		A-4455-AZ 17 B(208)	22-17-2171	A-4455-BH 17 J(565)		A-4455-BH 17 J(208)
18	22-16-2184	A-4455-AZ 18 B(565)		A-4455-AZ 18 B(208)	22-17-2181	A-4455-BH 18 J(565)		A-4455-BH 18 J(208)
19	22-16-2194	A-4455-AZ 19 B(565)		A-4455-AZ 19 B(208)	22-17-2191	A-4455-BH 19 J(565)		A-4455-BH 19 J(208)
20	22-16-2204	A-4455-AZ 20 B(565)		A-4455-AZ 20 B(208)	22-17-2201	A-4455-BH 20 J(565)		A-4455-BH 20 J(208)
21	22-16-2214	A-4455-AZ 21 B(565)		A-4455-AZ 21 B(208)	22-17-2211	A-4455-BH 21 J(565)		A-4455-BH 21 J(208)
22	22-16-2224	A-4455-AZ 22 B(565)		A-4455-AZ 22 B(208)	22-17-2221	A-4455-BH 22 J(565)		A-4455-BH 22 J(208)
23	22-16-2234	A-4455-AZ 23 B(565)		A-4455-AZ 23 B(208)	22-17-2231	A-4455-BH 23 J(565)		A-4455-BH 23 J(208)
24	22-16-2244	A-4455-AZ 24 B(565)		A-4455-AZ 24 B(208)	22-17-2241	A-4455-BH 24 J(565)		A-4455-BH 24 J(208)
25	22-16-2254	A-4455-AZ 25 B(565)		A-4455-AZ 25 B(208)	22-17-2251	A-4455-BH 25 J(565)		A-4455-BH 25 J(208)

REV:	ECR/ECN INFORMATION:	TITLE:	SHEET No.
D7	EC No.: **UCP2010-2172** DATE: **4/15/2010**	KK 100 PCB ASSY 4455 SERIES DWG	**- 5 -**

DOCUMENT NUMBER:	CREATED / REVISED BY:	CHECKED BY:	APPROVED BY:
SDA-4455	**MKIPPER**	**JBELL**	**FSMITH**

TEMPLATE FILENAME: PRODUCT_SPEC[SIZE_A](V.1).DOC

KK 100 PCB ASSY 2-25 CKT

4455 SERIES

	Assy Proc:	TOP ENTRY	Assy Proc:	TOP ENTRY	Assy Proc:	TOP ENTRY	Assy Proc:	RIGHT ANGLE
	Hooks Cut:	NO	Hooks Cut:	NO	Hooks Cut:	NO	Hooks Cut:	NO
	Housing No:	4455-N	Housing No:	4455-N	Housing No:	4455-4	Housing No:	4455-AN
	Terminal No:	6516-4(P909)	Terminal No:	6516-4(565)	Terminal No:	6516-4(208)	Terminal No:	4316-4(P909)
	Dim C:	3.35 / .132	Dim C:	3.35 / .132	Dim C:	3.35 / .132	Dim C:	3.35 / .132
	Plating:	P909	Plating:	565	Plating:	208	Plating:	P909
	Packaging:	PK-44646-001	Packaging:	PK-44646-001	Packaging:	PK-44646-001	Packaging:	PK-44646-001
	Voids:	NONE	Voids:	NONE	Voids:	NONE	Voids:	NONE
Ckts	Material No	Engineer Number	Material No	Engineer Number	Material No	Engineer Number	Material No	Engineer Number
2		A-4455-CZ02B(P909)	22-18-2022	A-4455-CZ02B(565)		A-4455-CZ02B(208)		
3		A-4455-CZ 03 B(P909)	22-18-2032	A-4455-CZ 03 B(565)		A-4455-CZ 03B(208)		
4		A-4455-CZ 04 B(P909)	22-18-2042	A-4455-CZ 04 B(565)		A-4455-CZ 04 B(208)		
5		A-4455-CZ 05 B(P909)	22-18-2052	A-4455-CZ 05 B(565)		A-4455-CZ 05 B(208)		
6		A-4455-CZ 06 B(P909)	22-18-2062	A-4455-CZ 06 B(565)		A-4455-CZ 06 B(208)		
7		A-4455-CZ 07 B(P909)	22-18-2072	A-4455-CZ 07 B(565)		A-4455-CZ 07 B(208)	22-15-2075	A-4455-AA07A(P909)
8		A-4455-CZ 08 B(P909)	22-18-2082	A-4455-CZ 08 B(565)		A-4455-CZ 08 B(208)	22-15-2085	A-4455-AA 08A(P909)
9		A-4455-CZ 09 B(P909)	22-18-2092	A-4455-CZ 09 B(565)		A-4455-CZ 09 B(208)	22-15-2095	A-4455-AA 09A(P909)
10		A-4455-CZ 10 B(P909)	22-18-2102	A-4455-CZ 10 B(565)		A-4455-CZ 10 B(208)	22-15-2105	A-4455-AA 10A(P909)
11		A-4455-CZ 11 B(P909)	22-18-2112	A-4455-CZ 11 B(565)		A-4455-CZ 11 B(208)	22-15-2115	A-4455-AA 11A(P909)
12		A-4455-CZ 12 B(P909)	22-18-2122	A-4455-CZ 12 B(565)		A-4455-CZ 12 B(208)	22-15-2125	A-4455-AA 12A(P909)
13		A-4455-CZ 13 B(P909)	22-18-2132	A-4455-CZ 13 B(565)		A-4455-CZ 13 B(208)	22-15-2135	A-4455-AA 13A(P909)
14		A-4455-CZ 14 B(P909)	22-18-2142	A-4455-CZ 14 B(565)		A-4455-CZ 14 B(208)	22-15-2145	A-4455-AA 14A(P909)
15		A-4455-CZ 15 B(P909)	22-18-2152	A-4455-CZ 15 B(565)		A-4455-CZ 15 B(208)	22-15-2155	A-4455-AA 15A(P909)
16		A-4455-CZ 16 B(P909)	22-18-2162	A-4455-CZ 16 B(565)		A-4455-CZ 16 B(208)	22-15-2165	A-4455-AA 16A(P909)
17		A-4455-CZ 17 B(P909)	22-18-2172	A-4455-CZ 17 B(565)		A-4455-CZ 17 B(208)	22-15-2175	A-4455-AA 17A(P909)
18		A-4455-CZ 18 B(P909)	22-18-2182	A-4455-CZ 18 B(565)		A-4455-CZ 18 B(208)	22-15-2185	A-4455-AA 18A(P909)
19		A-4455-CZ 19 B(P909)	22-18-2192	A-4455-CZ 19 B(565)		A-4455-CZ 19 B(208)	22-15-2195	A-4455-AA 19A(P909)
20		A-4455-CZ 20 B(P909)	22-18-2202	A-4455-CZ 20 B(565)		A-4455-CZ 20 B(208)	22-15-2205	A-4455-AA 20A(P909)
21		A-4455-CZ 21 B(P909)	22-18-2212	A-4455-CZ 21 B(565)		A-4455-CZ 21 B(208)	22-15-2215	A-4455-AA 21A(P909)
22		A-4455-CZ 22 B(P909)	22-18-2222	A-4455-CZ 22 B(565)		A-4455-CZ 22 B(208)	22-15-2225	A-4455-AA 22A(P909)
23		A-4455-CZ 23 B(P909)	22-18-2232	A-4455-CZ 23 B(565)		A-4455-CZ 23 B(208)	22-15-2235	A-4455-AA 23A(P909)
24		A-4455-CZ 24 B(P909)	22-18-2242	A-4455-CZ 24 B(565)		A-4455-CZ 24 B(208)	22-15-2245	A-4455-AA 24A(P909)
25		A-4455-CZ 25 B(P909)	22-18-2252	A-4455-CZ 25 B(565)		A-4455-CZ 25 B(208)	22-15-2255	A-4455-AA 25A(P909)

REV:	ECR/ECN INFORMATION:	TITLE:	SHEET No.
D7	EC No.: **UCP2010-2172** DATE: **4/15/2010**	KK 100 PCB ASSY 4455 SERIES DWG	**- 6 -**

DOCUMENT NUMBER:	CREATED / REVISED BY:	CHECKED BY:	APPROVED BY:
SDA-4455	**MKIPPER**	**JBELL**	**FSMITH**

KK 100 PCB ASSY 2-25 CKT

4455 SERIES

	Assy Proc:	RIGHT ANGLE	Assy Proc:	RIGHT ANGLE	Assy Proc:	RIGHT ANGLE	Assy Proc:	RIGHT ANGLE
	Hooks Cut:	NO	Hooks Cut:	NO	Hooks Cut:	NO	Hooks Cut:	NO
	Housing No:	4455-AN	Housing No:	4455-BN	Housing No:	4455-BN	Housing No:	4455-NHH
	Terminal No:	4316-4(208)	Terminal No:	4316-4(228)	Terminal No:	4316-4(P909)	Terminal No:	4316-4(P909)
	Dim C:	3.35 / .132	Dim C:	3.35 / .132	Dim C:	3.35 / .132	Dim C:	3.35 / .132
	Plating:	208	Plating:	228	Plating:	P909	Plating:	P909
	Packaging:	PK-44646-001	Packaging:	PK-44646-001	Packaging:	PK-44646-001	Packaging:	PK-44646-001
	Voids:	NONE	Voids:	NONE	Voids:	NONE	Voids:	NONE
Ckts	Material No	Engineer Number	Material No	Engineer Number	Material No	Engineer Number	Material No	Engineer Number
2				A-4455-AB02A(228)	22-15-4024	A-4455-AB02A(P909)	22-15-2022	A-4455-AE02A(P909)
3				A-4455-AB 03 A(228)	22-15-4034	A-4455-AB 03A(P909)	22-15-2032	A-4455-AE 03A(P909)
4				A-4455-AB 04 A(228)	22-15-4044	A-4455-AB 04A(P909)	22-15-2042	A-4455-AE 04A(P909)
5				A-4455-AB 05 A(228)	22-15-4054	A-4455-AB 05A(P909)	22-15-2052	A-4455-AE 05A(P909)
6			50-34-8518	A-4455-AB 06 A(228)	22-15-4064	A-4455-AB 06A(P909)	22-15-2062	A-4455-AE 06A(P909)
7	22-16-2076	A-4455-AA07A(208)		A-4455-AB 07 A(228)	22-15-4074	A-4455-AB 07A(P909)	22-15-2072	A-4455-AE 07A(P909)
8	22-16-2086	A-4455-AA 08 A(208)		A-4455-AB 08 A(228)	22-15-4084	A-4455-AB 08A(P909)	22-15-2082	A-4455-AE 08A(P909)
9	22-16-2096	A-4455-AA 09 A(208)		A-4455-AB 09 A(228)	22-15-4094	A-4455-AB 09A(P909)	22-15-2092	A-4455-AE 09A(P909)
10	22-16-2106	A-4455-AA 10 A(208)		A-4455-AB 10 A(228)	22-15-4104	A-4455-AB 10A(P909)	22-15-2102	A-4455-AE 10A(P909)
11	22-16-2116	A-4455-AA 11 A(208)		A-4455-AB 11 A(228)	22-15-4114	A-4455-AB 11A(P909)	22-15-2112	A-4455-AE 11A(P909)
12	22-16-2126	A-4455-AA 12 A(208)		A-4455-AB 12 A(228)	22-15-4124	A-4455-AB 12A(P909)	22-15-2122	A-4455-AE 12A(P909)
13	22-16-2136	A-4455-AA 13 A(208)		A-4455-AB 13 A(228)	22-15-4134	A-4455-AB 13A(P909)	22-15-2132	A-4455-AE 13A(P909)
14	22-16-2146	A-4455-AA 14 A(208)		A-4455-AB 14 A(228)	22-15-4144	A-4455-AB 14A(P909)	22-15-2142	A-4455-AE 14A(P909)
15	22-16-2156	A-4455-AA 15 A(208)		A-4455-AB 15 A(228)	22-15-4154	A-4455-AB 15A(P909)	22-15-2152	A-4455-AE 15A(P909)
16	22-16-2166	A-4455-AA 16 A(208)		A-4455-AB 16 A(228)	22-15-4164	A-4455-AB 16A(P909)	22-15-2162	A-4455-AE 16A(P909)
17	22-16-2176	A-4455-AA 17 A(208)		A-4455-AB 17 A(228)	22-15-4174	A-4455-AB 17A(P909)	22-15-2172	A-4455-AE 17A(P909)
18	22-16-2186	A-4455-AA 18 A(208)		A-4455-AB 18 A(228)	22-15-4184	A-4455-AB 18A(P909)	22-15-2182	A-4455-AE 18A(P909)
19	22-16-2196	A-4455-AA 19 A(208)		A-4455-AB 19 A(228)	22-15-4194	A-4455-AB 19A(P909)	22-15-2192	A-4455-AE 19A(P909)
20	22-16-2206	A-4455-AA 20 A(208)		A-4455-AB 20 A(228)	22-15-4204	A-4455-AB 20A(P909)	22-15-2202	A-4455-AE 20A(P909)
21	22-16-2216	A-4455-AA 21 A(208)		A-4455-AB 21 A(228)	22-15-4214	A-4455-AB 21A(P909)	22-15-2212	A-4455-AE 21A(P909)
22	22-16-2226	A-4455-AA 22 A(208)		A-4455-AB 22 A(228)	22-15-4224	A-4455-AB 22A(P909)	22-15-2222	A-4455-AE 22A(P909)
23	22-16-2236	A-4455-AA 23 A(208)		A-4455-AB 23 A(228)	22-15-4234	A-4455-AB 23A(P909)	22-15-2232	A-4455-AE 23A(P909)
24	22-16-2246	A-4455-AA 24 A(208)	22-17-3240	A-4455-AB 24 A(228)	22-15-4244	A-4455-AB 24A(P909)	22-15-2242	A-4455-AE 24A(P909)
25	22-16-2256	A-4455-AA 25 A(208)		A-4455-AB 25 A(228)	22-15-4254	A-4455-AB 25A(P909)	22-15-2252	A-4455-AE 25A(P909)

REV:	ECR/ECN INFORMATION:	TITLE:	SHEET No.
D7	EC No.: **UCP2010-2172** DATE: **4/15/2010**	KK 100 PCB ASSY 4455 SERIES DWG	**- 7 -**

DOCUMENT NUMBER:	CREATED / REVISED BY:	CHECKED BY:	APPROVED BY:
SDA-4455	**MKIPPER**	**JBELL**	**FSMITH**

KK 100 PCB ASSY 2-25 CKT

4455 SERIES

	Assy Proc:	RIGHT ANGLE	Assy Proc:	RIGHT ANGLE	Assy Proc:	RIGHT ANGLE	Assy Proc:	RIGHT ANGLE
	Hooks Cut:	NO	Hooks Cut:	NO	Hooks Cut:	NO	Hooks Cut:	NO
	Housing No:	4455-NR	Housing No:	4455-N	Housing No:	4455-N	Housing No:	4455-N
	Terminal No:	4316-4(P909)	Terminal No:	4316-4(228)	Terminal No:	6516-4(228)	Terminal No:	6516-4(228)
	Dim C:	3.35 / .132	Dim C:	3.35 / .132	Dim C:	3.35 / .132	Dim C:	3.35 / .132
	Plating:	P909	Plating:	228	Plating:	228	Plating:	228
	Packaging:	PK-44646-001	Packaging:	PK-44646-001	Packaging:	PK-44646-001	Packaging:	PK-44646-001
	Voids:	NONE	Voids:	NONE	Voids:	NONE	Voids:	NONE
Ckts	Material No	Engineer Number	Material No	Engineer Number	Material No	Engineer Number	Material No	Engineer Number
2	22-15-4022	A-4455-AR02A(P909)		A-4455-AZ02A(228)	22-17-5023	A-4455-AZ02B(228)	22-16-2022	A-4455-AZ02B(228)
3	22-15-4032	A-4455-AR 03 A(P909)		A-4455-AZ 03 A(228)	22-17-5033	A-4455-AZ 03 B(228)	22-16-2032	A-4455-AZ 03 B(228)
4	22-15-4042	A-4455-AR 04 A(P909)		A-4455-AZ 04 A(228)	22-17-5043	A-4455-AZ 04 B(228)	22-16-2042	A-4455-AZ 04 B(228)
5	22-15-4052	A-4455-AR 05 A(P909)		A-4455-AZ 05 A(228)	22-17-5053	A-4455-AZ 05 B(228)	22-16-2052	A-4455-AZ 05 B(228)
6	22-15-4062	A-4455-AR 06 A(P909)		A-4455-AZ 06 A(228)	22-17-5063	A-4455-AZ 06 B(228)	22-16-2062	A-4455-AZ 06 B(228)
7	22-15-4072	A-4455-AR 07 A(P909)		A-4455-AZ 07 A(228)	22-17-5073	A-4455-AZ 07 B(228)	22-16-2072	A-4455-AZ 07 B(228)
8	22-15-4082	A-4455-AR 08 A(P909)		A-4455-AZ 08 A(228)	22-17-5083	A-4455-AZ 08 B(228)	22-16-2082	A-4455-AZ 08 B(228)
9	22-15-4092	A-4455-AR 09 A(P909)		A-4455-AZ 09 A(228)	22-17-5093	A-4455-AZ 09 B(228)	22-16-2092	A-4455-AZ 09 B(228)
10	22-15-4102	A-4455-AR 10 A(P909)		A-4455-AZ 10 A(228)	22-17-5103	A-4455-AZ 10 B(228)	22-16-2102	A-4455-AZ 10 B(228)
11	22-15-4112	A-4455-AR 11 A(P909)		A-4455-AZ 11 A(228)	22-17-5113	A-4455-AZ 11 B(228)	22-16-2112	A-4455-AZ 11 B(228)
12	22-15-4122	A-4455-AR 12 A(P909)		A-4455-AZ 12 A(228)	22-17-5123	A-4455-AZ 12 B(228)	22-16-2122	A-4455-AZ 12 B(228)
13	22-15-4132	A-4455-AR 13 A(P909)		A-4455-AZ 13 A(228)	22-17-5133	A-4455-AZ 13 B(228)	22-16-2132	A-4455-AZ 13 B(228)
14	22-15-4142	A-4455-AR 14 A(P909)		A-4455-AZ 14 A(228)	22-17-5143	A-4455-AZ 14 B(228)	22-16-2142	A-4455-AZ 14 B(228)
15	22-15-4152	A-4455-AR 15 A(P909)		A-4455-AZ 15 A(228)	22-17-5153	A-4455-AZ 15 B(228)	22-16-2152	A-4455-AZ 15 B(228)
16	22-15-4162	A-4455-AR 16 A(P909)		A-4455-AZ 16 A(228)	22-17-5163	A-4455-AZ 16 B(228)	22-16-2162	A-4455-AZ 16 B(228)
17	22-15-4172	A-4455-AR 17 A(P909)		A-4455-AZ 17 A(228)	22-17-5173	A-4455-AZ 17 B(228)	22-16-2172	A-4455-AZ 17 B(228)
18	22-15-4182	A-4455-AR 18 A(P909)		A-4455-AZ 18 A(228)	22-17-5183	A-4455-AZ 18 B(228)	22-16-2182	A-4455-AZ 18 B(228)
19	22-15-4192	A-4455-AR 19 A(P909)		A-4455-AZ 19 A(228)	22-17-5193	A-4455-AZ 19 B(228)	22-16-2192	A-4455-AZ 19 B(228)
20	22-15-4202	A-4455-AR 20 A(P909)	22-17-5201	A-4455-AZ 20 A(228)	22-17-5203	A-4455-AZ 20 B(228)	22-16-2202	A-4455-AZ 20 B(228)
21	22-15-4212	A-4455-AR 21 A(P909)		A-4455-AZ 21 A(228)	22-17-5213	A-4455-AZ 21 B(228)	22-16-2212	A-4455-AZ 21 B(228)
22	22-15-4222	A-4455-AR 22 A(P909)		A-4455-AZ 22 A(228)	22-17-5223	A-4455-AZ 22 B(228)	22-16-2222	A-4455-AZ 22 B(228)
23	22-15-4232	A-4455-AR 23 A(P909)		A-4455-AZ 23 A(228)	22-17-5233	A-4455-AZ 23 B(228)	22-16-2232	A-4455-AZ 23 B(228)
24	22-15-4242	A-4455-AR 24 A(P909)	22-17-3247	A-4455-AZ 24 A(228)	22-17-5243	A-4455-AZ 24 B(228)	22-16-2242	A-4455-AZ 24 B(228)
25	22-15-4252	A-4455-AR 25 A(P909)		A-4455-AZ 25 A(228)	22-17-5253	A-4455-AZ 25 B(228)	22-16-2252	A-4455-AZ 25 B(228)

REV:	ECR/ECN INFORMATION:	TITLE:	SHEET No.
D7	EC No.: **UCP2010-2172** DATE: **4/15/2010**	KK 100 PCB ASSY 4455 SERIES DWG	**- 8 -**

DOCUMENT NUMBER:	CREATED / REVISED BY:	CHECKED BY:	APPROVED BY:
SDA-4455	**MKIPPER**	**JBELL**	**FSMITH**

TEMPLATE FILENAME: PRODUCT_SPEC[SIZE_A](V.1).DOC

KK 100 PCB ASSY 2-25 CKT

4455 SERIES

	Assy Proc:	BOTTOM ENTRY	Assy Proc:	BOTTOM ENTRY	Assy Proc:	BOTTOM ENTRY	Assy Proc:	BOTTOM ENTRY
	Hooks Cut:	NO	Hooks Cut:	NO	Hooks Cut:	NO	Hooks Cut:	NO
	Housing No:	4455-N2	Housing No:	4455-N2	Housing No:	4455-N2	Housing No:	4455-N2
	Terminal No:	4316-3B(228)	Terminal No:	4316-3B(231)	Terminal No:	4316-3B(228)	Terminal No:	6516-3B(228)
	Dim C:	3.35 / .132	Dim C:	3.35 / .132	Dim C:	3.35 / .132	Dim C:	3.35 / .132
	Plating:	228	Plating:	231	Plating:	228	Plating:	228
	Packaging:	PK-44646-001	Packaging:	PK-44646-001	Packaging:	PK-44646-001	Packaging:	PK-44646-001
	Voids:	NO	Voids:	NO	Voids:	NO	Voids:	NO
Ckts	Material No	Engineer Number	Material No	Engineer Number	Material No	Engineer Number	Material No	Engineer Number
2	22-17-2024	A-4455-BH02D(228)		A-4455-BH02D(231)		A-4455-BH02D(228)	22-17-2027	A-4455-BH02J(228)
3	22-17-2034	A-4455-BH03D(228)		A-4455-BH 03 D(231)		A-4455-BH03D(228)	22-17-2037	A-4455-BH03J(228)
4	22-17-2044	A-4455-BH04D(228)		A-4455-BH 04 D(231)		A-4455-BH04D(228)	22-17-2047	A-4455-BH04J(228)
5	22-17-2054	A-4455-BH05D(228)		A-4455-BH 05 D(231)	22-17-3056	A-4455-BH05D(228)	22-17-2057	A-4455-BH05J(228)
6	22-17-2064	A-4455-BH06D(228)		A-4455-BH 06 D(231)	22-17-3066	A-4455-BH06D(228)	22-17-2067	A-4455-BH06J(228)
7	22-17-2074	A-4455-BH07D(228)		A-4455-BH 07 D(231)		A-4455-BH07D(228)	22-17-2077	A-4455-BH07J(228)
8	22-17-2084	A-4455-BH08D(228)		A-4455-BH 08 D(231)	22-17-3086	A-4455-BH08D(228)	22-17-2087	A-4455-BH08J(228)
9	22-17-2094	A-4455-BH09D(228)		A-4455-BH 09 D(231)		A-4455-BH09D(228)	22-17-2097	A-4455-BH09J(228)
10	22-17-2104	A-4455-BH10D(228)		A-4455-BH 10 D(231)		A-4455-BH10D(228)	22-17-2107	A-4455-BH10J(228)
11	22-17-2114	A-4455-BH11D(228)		A-4455-BH 11 D(231)		A-4455-BH11D(228)	22-17-2117	A-4455-BH11J(228)
12	22-17-2124	A-4455-BH12D(228)		A-4455-BH 12 D(231)		A-4455-BH12D(228)	22-17-2127	A-4455-BH12J(228)
13	22-17-2134	A-4455-BH13D(228)		A-4455-BH 13 D(231)		A-4455-BH13D(228)	22-17-2137	A-4455-BH13J(228)
14	22-17-2144	A-4455-BH14D(228)	22-17-2140	A-4455-BH 14 D(231)	22-17-3146	A-4455-BH14D(228)	22-17-2147	A-4455-BH14J(228)
15	22-17-2154	A-4455-BH15D(228)		A-4455-BH 15 D(231)		A-4455-BH15D(228)	22-17-2157	A-4455-BH15J(228)
16	22-17-2164	A-4455-BH16D(228)		A-4455-BH 16 D(231)		A-4455-BH16D(228)	22-17-2167	A-4455-BH16J(228)
17	22-17-2174	A-4455-BH17D(228)		A-4455-BH 17 D(231)		A-4455-BH17D(228)	22-17-2177	A-4455-BH17J(228)
18	22-17-2184	A-4455-BH18D(228)		A-4455-BH 18 D(231)		A-4455-BH18D(228)	22-17-2187	A-4455-BH18J(228)
19	22-17-2194	A-4455-BH19D(228)		A-4455-BH 19 D(231)	22-17-3196	A-4455-BH19D(228)	22-17-2197	A-4455-BH19J(228)
20	22-17-2204	A-4455-BH20D(228)	22-17-2200	A-4455-BH 20 D(231)	22-17-3206	A-4455-BH20D(228)	22-17-2207	A-4455-BH20J(228)
21	22-17-2214	A-4455-BH21D(228)		A-4455-BH 21 D(231)		A-4455-BH21D(228)	22-17-2217	A-4455-BH21J(228)
22	22-17-2224	A-4455-BH22D(228)		A-4455-BH 22 D(231)		A-4455-BH22D(228)	22-17-2227	A-4455-BH22J(228)
23	22-17-2234	A-4455-BH23D(228)		A-4455-BH 23 D(231)		A-4455-BH23D(228)	22-17-2237	A-4455-BH23J(228)
24	22-17-2244	A-4455-BH24D(228)		A-4455-BH 24 D(231)		A-4455-BH24D(228)	22-17-2247	A-4455-BH24J(228)
25	22-17-2254	A-4455-BH25D(228)	22-17-2250	A-4455-BH 25 D(231)	22-17-3256	A-4455-BH25D(228)	22-17-2257	A-4455-BH25J(228)

REV:	ECR/ECN INFORMATION:	TITLE:	SHEET No.
D7	EC No.: **UCP2010-2172** DATE: **4/15/2010**	KK 100 PCB ASSY 4455 SERIES DWG	**- 9 -**

DOCUMENT NUMBER:	CREATED / REVISED BY:	CHECKED BY:	APPROVED BY:
SDA-4455	**MKIPPER**	**JBELL**	**FSMITH**

TEMPLATE FILENAME: PRODUCT_SPEC[SIZE_A](V.1).DOC

KK 100 PCB ASSY 2-25 CKT

4455 SERIES

	Assy Proc:	TOP ENTRY	Assy Proc:	TOP ENTRY	Assy Proc:	TOP ENTRY	Assy Proc:	TOP ENTRY
	Hooks Cut:	YES	Hooks Cut:	YES	Hooks Cut:	YES	Hooks Cut:	NO
	Housing No:	4455-NR	Housing No:	4455-N	Housing No:	4455-N	Housing No:	4455-BN
	Terminal No:	4316-4(208)	Terminal No:	4316-4(565)	Terminal No:	4316-4(P909)	Terminal No:	4316-4(P909)
	Dim C:	3.35 / .132	Dim C:	3.35 / .132	Dim C:	3.35 / .132	Dim C:	3.35 / .132
	Plating:	208	Plating:	565	Plating:	P909	Plating:	P909
	Packaging:	PK-44646-003	Packaging:	PK-44646-003	Packaging:	PK-44646-003	Packaging:	PK-44646-001
	Voids:	NO	Voids:	NO	Voids:	NO	Voids:	NO
Ckts	Material No	Engineer Number	Material No	Engineer Number	Material No	Engineer Number	Material No	Engineer Number
2		A-4455-CP02A(208)	22-18-2026	A-4455-CY02A(565)	22-02-7023	A-4455-CY02A(P909)	22-15-4028	A-4455-CB02A(P909)
3		A-4455-CP 03 A(208)	22-18-2036	A-4455-CY 03 A(565)	22-02-7033	A-4455-CY 03A(P909)	22-15-4038	A-4455-CB 03A(P909)
4		A-4455-CP 04 A(208)	22-18-2046	A-4455-CY 04 A(565)	22-02-7043	A-4455-CY 04A(P909)	22-15-4048	A-4455-CB 04A(P909)
5	22-18-2057	A-4455-CP 05 A(208)	22-18-2056	A-4455-CY 05 A(565)	22-02-7053	A-4455-CY 05A(P909)	22-15-4058	A-4455-CB 05A(P909)
6		A-4455-CP 06 A(208)	22-18-2066	A-4455-CY 06 A(565)	22-02-7063	A-4455-CY 06A(P909)	22-15-4068	A-4455-CB 06A(P909)
7		A-4455-CP 07 A(208)	22-18-2076	A-4455-CY 07 A(565)	22-02-7073	A-4455-CY 07A(P909)	22-15-4078	A-4455-CB 07A(P909)
8		A-4455-CP 08 A(208)	22-18-2086	A-4455-CY 08 A(565)	22-02-7083	A-4455-CY 08A(P909)	22-15-4088	A-4455-CB 08A(P909)
9		A-4455-CP 09 A(208)	22-18-2096	A-4455-CY 09 A(565)	22-02-7093	A-4455-CY 09A(P909)	22-15-4098	A-4455-CB 09A(P909)
10		A-4455-CP 10 A(208)	22-18-2106	A-4455-CY 10 A(565)	22-02-7103	A-4455-CY 10A(P909)	22-15-4108	A-4455-CB 10A(P909)
11		A-4455-CP 11 A(208)	22-18-2116	A-4455-CY 11 A(565)	22-02-7113	A-4455-CY 11A(P909)	22-15-4118	A-4455-CB 11A(P909)
12		A-4455-CP 12 A(208)	22-18-2126	A-4455-CY 12 A(565)	22-02-7123	A-4455-CY 12A(P909)	22-15-4128	A-4455-CB 12A(P909)
13		A-4455-CP 13 A(208)	22-18-2136	A-4455-CY 13 A(565)	22-02-7133	A-4455-CY 13A(P909)	22-15-4138	A-4455-CB 13A(P909)
14		A-4455-CP 14 A(208)	22-18-2146	A-4455-CY 14 A(565)	22-02-7143	A-4455-CY 14A(P909)	22-15-4148	A-4455-CB 14A(P909)
15		A-4455-CP 15 A(208)	22-18-2156	A-4455-CY 15 A(565)	22-02-7153	A-4455-CY 15A(P909)	22-15-4158	A-4455-CB 15A(P909)
16		A-4455-CP 16 A(208)	22-18-2166	A-4455-CY 16 A(565)	22-02-7163	A-4455-CY 16A(P909)	22-15-4168	A-4455-CB 16A(P909)
17		A-4455-CP 17 A(208)	22-18-2176	A-4455-CY 17 A(565)	22-02-7173	A-4455-CY 17A(P909)	22-15-4178	A-4455-CB 17A(P909)
18		A-4455-CP 18 A(208)	22-18-2186	A-4455-CY 18 A(565)	22-02-7183	A-4455-CY 18A(P909)	22-15-4188	A-4455-CB 18A(P909)
19		A-4455-CP 19 A(208)	22-18-2196	A-4455-CY 19 A(565)	22-02-7193	A-4455-CY 19A(P909)	22-15-4198	A-4455-CB 19A(P909)
20		A-4455-CP 20 A(208)	22-18-2206	A-4455-CY 20 A(565)	22-02-7203	A-4455-CY 20A(P909)	22-15-4208	A-4455-CB 20A(P909)
21		A-4455-CP 21 A(208)	22-18-2216	A-4455-CY 21 A(565)	22-02-7213	A-4455-CY 21A(P909)	22-15-4218	A-4455-CB 21A(P909)
22		A-4455-CP 22 A(208)	22-18-2226	A-4455-CY 22 A(565)	22-02-7223	A-4455-CY 22A(P909)	22-15-4228	A-4455-CB 22A(P909)
23		A-4455-CP 23 A(208)	22-18-2236	A-4455-CY 23 A(565)	22-02-7233	A-4455-CY 23A(P909)	22-15-4238	A-4455-CB 23A(P909)
24		A-4455-CP 24 A(208)	22-18-2246	A-4455-CY 24 A(565)	22-02-7243	A-4455-CY 24A(P909)	22-15-4248	A-4455-CB 24A(P909)
25		A-4455-CP 25 A(208)	22-18-2256	A-4455-CY 25 A(565)	22-02-7253	A-4455-CY 25A(P909)	22-15-4258	A-4455-CB 25A(P909)

REV:	ECR/ECN INFORMATION:	TITLE:	SHEET No.
D7	EC No.: **UCP2010-2172** DATE: **4/15/2010**	KK 100 PCB ASSY 4455 SERIES DWG	**- 10 -**

DOCUMENT NUMBER:	CREATED / REVISED BY:	CHECKED BY:	APPROVED BY:
SDA-4455	**MKIPPER**	**JBELL**	**FSMITH**

KK 100 PCB ASSY 2-25 CKT

4455 SERIES

	Assy Proc:	TOP ENTRY	Assy Proc:	TOP ENTRY	Assy Proc:	TOP ENTRY	Assy Proc:	TOP ENTRY
	Hooks Cut:	NO	Hooks Cut:	NO	Hooks Cut:	YES	Hooks Cut:	YES
	Housing No:	4455-NR	Housing No:	4455-N	Housing No:	4455-N	Housing No:	4455-N
	Terminal No:	4316-4(P909)	Terminal No:	6516-4(228)	Terminal No:	4316-4(208)	Terminal No:	6516-4(228)
	Dim C:	3.35 / .132	Dim C:	3.35 / .132	Dim C:	3.35 / .132	Dim C:	3.35 / .132
	Plating:	P909	Plating:	228	Plating:	208	Plating:	228
	Packaging:	PK-44646-001	Packaging:	PK-44646-001	Packaging:	PK-44646-003	Packaging:	PK-44646-003
	Voids:	NO	Voids:	NO	Voids:	NO	Voids:	NO

Ckts	Material No	Engineer Number	Material No	Engineer Number	Material No	Engineer Number	Material No	Engineer Number
2	22-65-3020	A-4455-CR02A(P909)	22-18-2024	A-4455-CZ02B(228)	22-18-7023	A-4455-CY02A(208)	22-18-7021	A-4455-CY02B(228)
3	22-65-3030	A-4455-CR 03A(P909)	22-18-2034	A-4455-CZ 03 B(228)	22-18-7033	A-4455-CY 03 A(208)	22-18-7031 38-00-1478	A-4455-CY 03 B(228)
4	22-65-3040	A-4455-CR 04A(P909)	22-18-2044	A-4455-CZ 04 B(228)	22-18-7043	A-4455-CY 04 A(208)	22-18-7041	A-4455-CY 04 B(228)
5	22-65-3050	A-4455-CR 05A(P909)	22-18-2054	A-4455-CZ 05 B(228)	22-18-7053	A-4455-CY 05 A(208)	22-18-7051	A-4455-CY 05 B(228)
6	22-65-3060	A-4455-CR 06A(P909)	22-18-2064	A-4455-CZ 06 B(228)	22-18-7063	A-4455-CY 06 A(208)	22-18-7061	A-4455-CY 06 B(228)
7	22-65-3070	A-4455-CR 07A(P909)	22-18-2074	A-4455-CZ 07 B(228)	22-18-7073	A-4455-CY 07 A(208)	22-18-7071	A-4455-CY 07 B(228)
8	22-65-3080	A-4455-CR 08A(P909)	22-18-2084	A-4455-CZ 08 B(228)	22-18-7083	A-4455-CY 08 A(208)	22-18-7081	A-4455-CY 08 B(228)
9	22-65-3090	A-4455-CR 09A(P909)	22-18-2094	A-4455-CZ 09 B(228)	22-18-7093	A-4455-CY 09 A(208)	22-18-7091	A-4455-CY 09 B(228)
10	22-65-3100	A-4455-CR 10A(P909)	22-18-2104	A-4455-CZ 10 B(228)	22-18-7103	A-4455-CY 10 A(208)	22-18-7101	A-4455-CY 10 B(228)
11	22-65-3110	A-4455-CR 11A(P909)	22-18-2114	A-4455-CZ 11 B(228)	22-18-7113	A-4455-CY 11 A(208)	22-18-7111	A-4455-CY 11 B(228)
12	22-65-3120	A-4455-CR 12A(P909)	22-18-2124	A-4455-CZ 12 B(228)	22-18-7123	A-4455-CY 12 A(208)	22-18-7121	A-4455-CY 12 B(228)
13	22-65-3130	A-4455-CR 13A(P909)	22-18-2134	A-4455-CZ 13 B(228)	22-18-7133	A-4455-CY 13 A(208)	22-18-7131	A-4455-CY 13 B(228)
14	22-65-3140	A-4455-CR 14A(P909)	22-18-2144	A-4455-CZ 14 B(228)	22-18-7143	A-4455-CY 14 A(208)	22-18-7141	A-4455-CY 14 B(228)
15	22-65-3150	A-4455-CR 15A(P909)	22-18-2154	A-4455-CZ 15 B(228)	22-18-7153	A-4455-CY 15 A(208)	22-18-7151	A-4455-CY 15 B(228)
16	22-65-3160	A-4455-CR 16A(P909)	22-18-2164	A-4455-CZ 16 B(228)	22-18-7163	A-4455-CY 16 A(208)	22-18-7161	A-4455-CY 16 B(228)
17	22-65-3170	A-4455-CR 17A(P909)	22-18-2174	A-4455-CZ 17 B(228)	22-18-7173	A-4455-CY 17 A(208)	22-18-7171	A-4455-CY 17 B(228)
18	22-65-3180	A-4455-CR 18A(P909)	22-18-2184	A-4455-CZ 18 B(228)	22-18-7183	A-4455-CY 18 A(208)	22-18-7181	A-4455-CY 18 B(228)
19	22-65-3190	A-4455-CR 19A(P909)	22-18-2194	A-4455-CZ 19 B(228)	22-18-7193	A-4455-CY 19 A(208)	22-18-7191	A-4455-CY 19 B(228)
20	22-65-3200	A-4455-CR 20A(P909)	22-18-2204	A-4455-CZ 20 B(228)	22-18-7203	A-4455-CY 20 A(208)	22-18-7201	A-4455-CY 20 B(228)
21	22-65-3210	A-4455-CR 21A(P909)	22-18-2214	A-4455-CZ 21 B(228)	22-18-7213	A-4455-CY 21 A(208)	22-18-7211	A-4455-CY 21 B(228)
22	22-65-3220	A-4455-CR 22A(P909)	22-18-2224	A-4455-CZ 22 B(228)	22-18-7223	A-4455-CY 22 A(208)	22-18-7221	A-4455-CY 22 B(228)
23	22-65-3230	A-4455-CR 23A(P909)	22-18-2234	A-4455-CZ 23 B(228)	22-18-7233	A-4455-CY 23 A(208)	22-18-7231	A-4455-CY 23 B(228)
24	22-65-3240	A-4455-CR 24A(P909)	22-18-2244	A-4455-CZ 24 B(228)	22-18-7243	A-4455-CY 24 A(208)	22-18-7241	A-4455-CY 24 B(228)
25	22-65-3250	A-4455-CR 25A(P909)	22-18-2254	A-4455-CZ 25 B(228)	22-18-7253	A-4455-CY 25 A(208)	22-18-7251	A-4455-CY 25 B(228)

REV:	ECR/ECN INFORMATION:	TITLE:	SHEET No.
D7	EC No.: **UCP2010-2172** DATE: **4/15/2010**	KK 100 PCB ASSY 4455 SERIES DWG	**- 11 -**

DOCUMENT NUMBER:	CREATED / REVISED BY:	CHECKED BY:	APPROVED BY:
SDA-4455	**MKIPPER**	**JBELL**	**FSMITH**

TEMPLATE FILENAME: PRODUCT_SPEC[SIZE_A](V.1).DOC

KK 100 PCB ASSY 2-25 CKT

4455 SERIES

	Assy Proc:	RIGHT ANGLE	Assy Proc:	BOTTOM ENTRY	Assy Proc:	RIGHT ANGLE	Assy Proc:	RIGHT ANGLE
	Hooks Cut:	NO	Hooks Cut:	NO	Hooks Cut:	NO	Hooks Cut:	NO
	Housing No:	4455-N	Housing No:	4455-N2	Housing No:	4455-AN	Housing No:	4455-AN
	Terminal No:	6516-5C(P909)	Terminal No:	6516-6C(P909)	Terminal No:	6516-4(P909)	Terminal No:	4316-4(565)
	Dim C:	3.35±1.00/.132±.039	Dim C:	3.61±1.00/.142±.039	Dim C:	3.35 / .132	Dim C:	3.35 / .132
	Plating:	P909	Plating:	P909	Plating:	P909	Plating:	565
	Packaging:	PK-44646-001	Packaging:	PK-44646-001	Packaging:	PK-44646-001	Packaging:	PK-44646-001
	Voids:	NO	Voids:	NO	Voids:	NO	Voids:	NO
Ckts	Material No	Engineer Number	Material No	Engineer Number	Material No	Engineer Number	Material No	Engineer Number
2	38-00-1332	A-4455-AZ02C(P909)	38-00-1392	A-4455-BH02F(P909)				
3	38-00-1333	A-4455-AZ03C(P909)	38-00-1393	A-4455-BH03F(P909)				
4	38-00-1334	A-4455-AZ04C(P909)	38-00-1394	A-4455-BH04F(P909)				
5	38-00-1335	A-4455-AZ05C(P909)	38-00-1395	A-4455-BH05F(P909)				
6	38-00-1336	A-4455-AZ06C(P909)	38-00-1396	A-4455-BH06F(P909)				
7	38-00-1337	A-4455-AZ07C(P909)	38-00-1397	A-4455-BH07F(P909)	22-14-2079	A-4455-AA07B(P909)	22-14-2077	A-4455-AA07A(565)
8	38-00-1338	A-4455-AZ08C(P909)	38-00-1398	A-4455-BH08F(P909)	22-14-2089	A-4455-AA 08 B(P909)	22-14-2087	A-4455-AA 08 A(565)
9	38-00-1339	A-4455-AZ09C(P909)	38-00-1399	A-4455-BH09F(P909)	22-14-2099	A-4455-AA 09 B(P909)	22-14-2097	A-4455-AA 09 A(565)
10	38-00-1340	A-4455-AZ10C(P909)	38-00-1400	A-4455-BH10F(P909)	22-14-2109	A-4455-AA 10 B(P909)	22-14-2107	A-4455-AA 10 A(565)
11	38-00-1341	A-4455-AZ11C(P909)	38-00-1401	A-4455-BH11F(P909)	22-14-2119	A-4455-AA 11 B(P909)	22-14-2117	A-4455-AA 11 A(565)
12	38-00-1342	A-4455-AZ12C(P909)	38-00-1402	A-4455-BH12F(P909)	22-14-2129	A-4455-AA 12 B(P909)	22-14-2127	A-4455-AA 12 A(565)
13	38-00-1343	A-4455-AZ13C(P909)	38-00-1403	A-4455-BH13F(P909)	22-14-2139	A-4455-AA 13 B(P909)	22-14-2137	A-4455-AA 13 A(565)
14	38-00-1344	A-4455-AZ14C(P909)	38-00-1404	A-4455-BH14F(P909)	22-14-2149	A-4455-AA 14 B(P909)	22-14-2147	A-4455-AA 14 A(565)
15	38-00-1345	A-4455-AZ15C(P909)	38-00-1405	A-4455-BH15F(P909)	22-14-2159	A-4455-AA 15 B(P909)	22-14-2157	A-4455-AA 15 A(565)
16	38-00-1346	A-4455-AZ16C(P909)	38-00-1406	A-4455-BH16F(P909)	22-14-2169	A-4455-AA 16 B(P909)	22-14-2167	A-4455-AA 16 A(565)
17	38-00-1347	A-4455-AZ17C(P909)	38-00-1407	A-4455-BH17F(P909)	22-14-2179	A-4455-AA 17 B(P909)	22-14-2177	A-4455-AA 17 A(565)
18	38-00-1348	A-4455-AZ18C(P909)	38-00-1408	A-4455-BH18F(P909)	22-14-2189	A-4455-AA 18 B(P909)	22-14-2187	A-4455-AA 18 A(565)
19	38-00-1349	A-4455-AZ19C(P909)	38-00-1409	A-4455-BH19F(P909)	22-14-2199	A-4455-AA 19 B(P909)	22-14-2197	A-4455-AA 19 A(565)
20	38-00-1350	A-4455-AZ20C(P909)	38-00-1410	A-4455-BH20F(P909)	22-14-2209	A-4455-AA 20 B(P909)	22-14-2207	A-4455-AA 20 A(565)
21	38-00-1351	A-4455-AZ21C(P909)	38-00-1411	A-4455-BH21F(P909)	22-14-2219	A-4455-AA 21 B(P909)	22-14-2217	A-4455-AA 21 A(565)
22	38-00-1352	A-4455-AZ22C(P909)	38-00-1412	A-4455-BH22F(P909)	22-14-2229	A-4455-AA 22 B(P909)	22-14-2227	A-4455-AA 22 A(565)
23	38-00-1353	A-4455-AZ23C(P909)	38-00-1413	A-4455-BH23F(P909)	22-14-2239	A-4455-AA 23 B(P909)	22-14-2237	A-4455-AA 23 A(565)
24	38-00-1354	A-4455-AZ24C(P909)	38-00-1414	A-4455-BH24F(P909)	22-14-2249	A-4455-AA 24 B(P909)	22-14-2247	A-4455-AA 24 A(565)
25	38-00-1355	A-4455-AZ25C(P909)	38-00-1415	A-4455-BH25F(P909)	22-14-2259	A-4455-AA 25 B(P909)	22-14-2257	A-4455-AA 25 A(565)

REV:	ECR/ECN INFORMATION:	TITLE:	SHEET No.
D7	EC No.: **UCP2010-2172** DATE: **4/15/2010**	KK 100 PCB ASSY 4455 SERIES DWG	**- 12 -**

DOCUMENT NUMBER:	CREATED / REVISED BY:	CHECKED BY:	APPROVED BY:
SDA-4455	**MKIPPER**	**JBELL**	**FSMITH**

KK 100 PCB ASSY 2-25 CKT

4455 SERIES

	Assy Proc:	RIGHT ANGLE	Assy Proc:	RIGHT ANGLE	Assy Proc:	TOP ENTRY	Assy Proc:	TOP ENTRY
	Hooks Cut:	NO	Hooks Cut:	NO	Hooks Cut:	NO	Hooks Cut:	YES
	Housing No:	4455-AN	Housing No:	4455-BN	Housing No:	4455-N	Housing No:	4455-N-02
	Terminal No:	4316-4A(P909)	Terminal No:	4316-4(565)	Terminal No:	6516-5C(P909)	Terminal No:	4316-4(P909)
	Dim C:	3.35 / .132	Dim C:	3.35 / .132	Dim C:	3.35±1.00/.132±.039	Dim C:	3.35 / .132
	Plating:	P909	Plating:	565	Plating:	P909	Plating:	P909
	Packaging:	PK-44646-001	Packaging:	PK-44646-001	Packaging:	PK-44646-001	Packaging:	PK-44646-003
	Voids:	NO	Voids:	NO	Voids:	NO	Voids:	YES IN CKT 2
Ckts	Material No	Engineer Number	Material No	Engineer Number	Material No	Engineer Number	Material No	Engineer Number
2			22-16-3028	A-4455-AB02A(565)	38-00-1422	A-4455-CZ02C(P909)		
3			22-16-3038	A-4455-AB 03 A(565)	38-00-1423	A-4455-CZ03C(P909)		
4			22-16-3048	A-4455-AB 04 A(565)	38-00-1424	A-4455-CZ04C(P909)		
5			22-16-3058	A-4455-AB 05 A(565)	38-00-1425	A-4455-CZ05C(P909)		
6			22-16-3068	A-4455-AB 06 A(565)	38-00-1426	A-4455-CZ06C(P909)	22-02-3068	A-4455-CW06A(P909)-2
7	22-14-3617	A-4455-AA07T(P909)	22-16-3078	A-4455-AB 07 A(565)	38-00-1427	A-4455-CZ07C(P909)	50-29-0004	A-4455-CW07A(P909)-2
8	22-14-3618	A-4455-AA 08 T(P909)	22-16-3088	A-4455-AB 08 A(565)	38-00-1428	A-4455-CZ08C(P909)		
9	22-14-3619	A-4455-AA 09 T(P909)	22-16-3098	A-4455-AB 09 A(565)	38-00-1429	A-4455-CZ09C(P909)		
10	22-14-3711	A-4455-AA 10 T(P909)	22-16-3108	A-4455-AB 10 A(565)	38-00-1430	A-4455-CZ10C(P909)		
11	22-14-3712	A-4455-AA 11 T(P909)	22-16-3118	A-4455-AB 11 A(565)	38-00-1431	A-4455-CZ11C(P909)		
12	22-14-3713	A-4455-AA 12 T(P909)	22-16-3128	A-4455-AB 12 A(565)	38-00-1432	A-4455-CZ12C(P909)		
13	22-14-3714	A-4455-AA 13 T(P909)	22-16-3138	A-4455-AB 13 A(565)	38-00-1433	A-4455-CZ13C(P909)		
14	22-14-3715	A-4455-AA 14 T(P909)	22-16-3148	A-4455-AB 14 A(565)	38-00-1434	A-4455-CZ14C(P909)		
15	22-14-3716	A-4455-AA 15 T(P909)	22-16-3158	A-4455-AB 15 A(565)	38-00-1435	A-4455-CZ15C(P909)		
16	22-14-3717	A-4455-AA 16 T(P909)	22-16-3168	A-4455-AB 16 A(565)	38-00-1436	A-4455-CZ16C(P909)		
17	22-14-3718	A-4455-AA 17 T(P909)	22-16-3178	A-4455-AB 17 A(565)	38-00-1437	A-4455-CZ17C(P909)		
18	22-14-3719	A-4455-AA 18 T(P909)	22-16-3188	A-4455-AB 18 A(565)	38-00-1438	A-4455-CZ18C(P909)		
19	22-14-3811	A-4455-AA 19 T(P909)	22-16-3198	A-4455-AB 19 A(565)	38-00-1439	A-4455-CZ19C(P909)		
20	22-14-3812	A-4455-AA 20 T(P909)	22-16-3208	A-4455-AB 20 A(565)	38-00-1440	A-4455-CZ20C(P909)		
21	22-14-3813	A-4455-AA 21 T(P909)	22-16-3218	A-4455-AB 21 A(565)	38-00-1441	A-4455-CZ21C(P909)		
22	22-14-3814	A-4455-AA 22 T(P909)	22-16-3228	A-4455-AB 22 A(565)	38-00-1442	A-4455-CZ22C(P909)		
23	22-14-3815	A-4455-AA 23 T(P909)	22-16-3238	A-4455-AB 23 A(565)	38-00-1443	A-4455-CZ23C(P909)		
24	22-14-3816	A-4455-AA 24 T(P909)	22-16-3248	A-4455-AB 24 A(565)	38-00-1444	A-4455-CZ24C(P909)		
25	22-14-3817	A-4455-AA 25 T(P909)	22-16-3258	A-4455-AB 25 A(565)	38-00-1445	A-4455-CZ25C(P909)		

REV:	ECR/ECN INFORMATION:	TITLE:	SHEET No.
D7	EC No.: **UCP2010-2172** DATE: **4/15/2010**	KK 100 PCB ASSY 4455 SERIES DWG	**- 13 -**

DOCUMENT NUMBER:	CREATED / REVISED BY:	CHECKED BY:	APPROVED BY:
SDA-4455	**MKIPPER**	**JBELL**	**FSMITH**

TEMPLATE FILENAME: PRODUCT_SPEC[SIZE_A](V.1).DOC

KK 100 PCB ASSY 2-25 CKT

4455 SERIES

	Assy Proc:	RIGHT ANGLE	Assy Proc:	RIGHT ANGLE	Assy Proc:	TOP ENTRY	Assy Proc:	TOP ENTRY
	Hooks Cut:	YES	Hooks Cut:	YES	Hooks Cut:	YES	Hooks Cut:	YES
	Housing No:	4455-N	Housing No:	4455-N	Housing No:	4455-N	Housing No:	4455-N
	Terminal No:	4316-4(P909)	Terminal No:	6516-4(208)	Terminal No:	6516-4(P909)	Terminal No:	4316-4(P909)
	Dim C:	3.35 / .132	Dim C:	3.35 / .132	Dim C:	3.35 / .132	Dim C:	3.35 / .132
	Plating:	P909	Plating:	208	Plating:	P909	Plating:	P909
	Packaging:	PK-44646-004	Packaging:	PK-44646-004	Packaging:	PK-44646-003	Packaging:	PK-44646-003
	Voids:	NO	Voids:	NO	Voids:	NO	Voids:	YES IN CKT 2
Ckts	Material No	Engineer Number	Material No	Engineer Number	Material No	Engineer Number	Material No	Engineer Number
2		A-4455-AY02A(P909)		A-4455-AY02B(208)		A-4455-CY02B(P909)		
3	22-02-7262	A-4455-AY 03 A(P909)	50-29-0035	A-4455-AY 03 B(208)		A-4455-CY 03B(P909)		
4		A-4455-AY 04 A(P909)		A-4455-AY 04 B(208)		A-4455-CY 04B(P909)		
5		A-4455-AY 05 A(P909)		A-4455-AY 05 B(208)	50-29-1553	A-4455-CY 05B(P909)		
6		A-4455-AY 06 A(P909)		A-4455-AY 06 B(208)	50-29-1554	A-4455-CY 06B(P909)	22-15-5065	A-4455-CY06A(P909)-2
7		A-4455-AY 07 A(P909)		A-4455-AY 07 B(208)		A-4455-CY 07B(P909)		
8		A-4455-AY 08 A(P909)		A-4455-AY 08 B(208)		A-4455-CY 08B(P909)		
9		A-4455-AY 09 A(P909)		A-4455-AY 09 B(208)		A-4455-CY 09B(P909)		
10		A-4455-AY 10 A(P909)		A-4455-AY 10 B(208)		A-4455-CY 10B(P909)		
11		A-4455-AY 11 A(P909)		A-4455-AY 11 B(208)		A-4455-CY 11B(P909)		
12		A-4455-AY 12 A(P909)		A-4455-AY 12 B(208)		A-4455-CY 12B(P909)		
13		A-4455-AY 13 A(P909)		A-4455-AY 13 B(208)		A-4455-CY 13B(P909)		
14		A-4455-AY 14 A(P909)		A-4455-AY 14 B(208)		A-4455-CY 14B(P909)		
15		A-4455-AY 15 A(P909)		A-4455-AY 15 B(208)		A-4455-CY 15B(P909)		
16		A-4455-AY 16 A(P909)		A-4455-AY 16 B(208)		A-4455-CY 16B(P909)		
17		A-4455-AY 17 A(P909)		A-4455-AY 17 B(208)		A-4455-CY 17B(P909)		
18		A-4455-AY 18 A(P909)		A-4455-AY 18 B(208)		A-4455-CY 18B(P909)		
19		A-4455-AY 19 A(P909)		A-4455-AY 19 B(208)		A-4455-CY 19B(P909)		
20		A-4455-AY 20 A(P909)		A-4455-AY 20 B(208)		A-4455-CY 20B(P909)		
21		A-4455-AY 21 A(P909)		A-4455-AY 21 B(208)		A-4455-CY 21B(P909)		
22		A-4455-AY 22 A(P909)		A-4455-AY 22 B(208)		A-4455-CY 22B(P909)		
23		A-4455-AY 23 A(P909)		A-4455-AY 23 B(208)		A-4455-CY 23B(P909)		
24		A-4455-AY 24 A(P909)		A-4455-AY 24 B(208)		A-4455-CY 24B(P909)		
25		A-4455-AY 25 A(P909)		A-4455-AY 25 B(208)		A-4455-CY 25B(P909)		

REV:	ECR/ECN INFORMATION:	TITLE:	SHEET No.
D7	EC No.: **UCP2010-2172** DATE: **4/15/2010**	KK 100 PCB ASSY 4455 SERIES DWG	**- 14 -**

DOCUMENT NUMBER:	CREATED / REVISED BY:	CHECKED BY:	APPROVED BY:
SDA-4455	**MKIPPER**	**JBELL**	**FSMITH**

TEMPLATE FILENAME: PRODUCT_SPEC[SIZE_A](V.1).DOC

KK 100 PCB ASSY 2-25 CKT

4455 SERIES

	Assy Proc:	BOTTOM ENTRY	Assy Proc:	BOTTOM ENTRY	Assy Proc:		Assy Proc:		
	Hooks Cut:	NO	Hooks Cut:	NO	Hooks Cut:		Hooks Cut:		
	Housing No:	4455-N2	Housing No:	4455-N2	Housing No:		Housing No:		
	Terminal No:	4316-3B(P909)	Terminal No:	4316-3B(208)	Terminal No:		Terminal No:		
	Dim C:	.132 / 3.35	Dim C:	.132 / 3.35	Dim C:		Dim C:		
	Plating:	P909	Plating:	208	Plating:		Plating:		
	Packaging:	PK-44646-001	Packaging:	PK-44646-001	Packaging:		Packaging:		
	Voids:	YES IN CKT 10	Voids:	2,3,4,6,7,8,10,11,12	Voids:		Voids:		
Ckts	Material No	Engineer Number	Material No	Engineer Number	Material No	Engineer Number	Material No	Engineer Number	
2									
3									
4									
5									
6									
7									
8									
9									
10									
11	50-36-1881	A-4455-BH11D(P909)-10							
12									
13			26-01-3099	A-4455-BH13D(208)-51					
14									
15									
16									
17									
18									
19									
20									
21									
22									
23									
24									
25									

REV:	ECR/ECN INFORMATION:	TITLE:	SHEET No.
D7	EC No.: **UCP2010-2172** DATE: **4/15/2010**	KK 100 PCB ASSY 4455 SERIES DWG	**- 15 -**

DOCUMENT NUMBER:	CREATED / REVISED BY:	CHECKED BY:	APPROVED BY:
SDA-4455	**MKIPPER**	**JBELL**	**FSMITH**