# 377-040
# Composite Strain-Relief Backshell
## for Fiber Optic MIL-DTL-38999 Series III Connectors

D38999 Series III

B

## *Composite MIL-DTL-38999 series III strain-relief backshell*



### How To Order

| Product Series | Angular Function | Material/ Finish | Strain Relief Style |
|---|---|---|---|
| | *S* = Straight<br>*W* = 90° Elbow | *(Table II)* | *A* = Adapter<br>*N* = Nut |

| 377 | H | S | 040 | XO | 19 | A |
|---|---|---|---|---|---|---|
| | Connector Designator<br>*H* = MIL-DTL-38999 Series III & IV<br>*U* = MIL-C-26900 | | Basic No. | | Shell Size<br>*(Table I)* | |

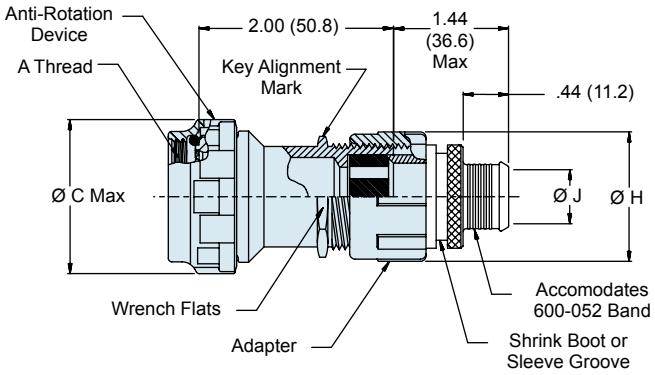


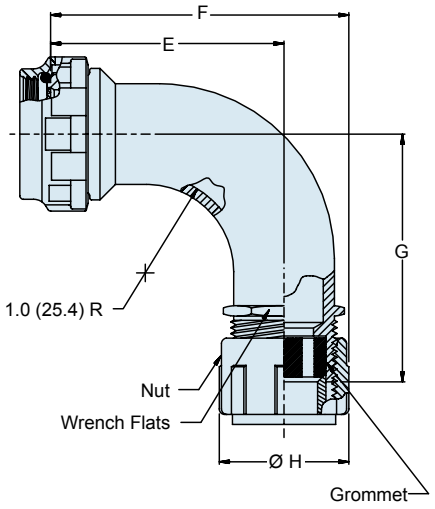


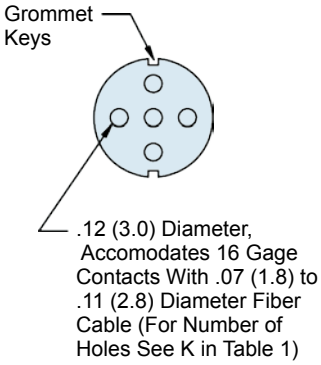


### *Material and Finish*

Adapters, Elbow: Hi-grade engineering thermoplastic/see table II
Coupling Nut & Gland Nut: Thermoplastic/unplated
Grommet, O-Ring: Silicone
Anti-Rotation Device: Corrosion resistant material

### *Notes*

Glenair 600 Series Backshell assembly tools are recommended for assembly and installation.

© 2012 Glenair, Inc.

| Table I | | | | | | | | | | | | |
|---|---|---|---|---|---|---|---|---|---|---|---|---|
| Connector Designator H | | | | Connector Designator U | | | | E ±.06 (1.5) | F ±.09 (2.3) | G ±.06 (1.5) | Ø H Max | Ø J Ref |
| Shell Size | A Thread | Ø C | K (# of Holes) * | Shell Size | A Thread | Ø C | K (# Of Holes) * | | | | | |
| 11 | M15 X 1 - 6H | .98 (24.9) | 2 | - | - | - | - | 1.70 (43.2) | 2.39 (60.7) | 1.90 (48.3) | 1.41 (35.8) | .27 (6.9) |
| 13 | M18 X 1 - 6H | 1.16 (29.4) | 4 | 11 | 5/8-28 UN | 1.16 (29.4) | 2 | 1.78 (45.2) | 2.47 (62.7) | 1.96 (49.8) | 1.41 (35.8) | .33 (8.4) |
| 15 | M22 X 1 - 6H | 1.28 (32.5) | 5 | 13 | 3/4-28 UNS | 1.28 (32.5) | 4 | 1.82 (46.2) | 2.51 (63.8) | 2.02 (51.3) | 1.41 (35.8) | .39 (9.9) |
| 17 | M25 X 1 - 6H | 1.41 (35.7) | 8 | 15 | 7/8-28 UN | 1.41 (35.7) | 5 | 1.89 (48.0) | 2.70 (68.6) | 2.09 (53.1) | 1.64 (41.7) | .51 (13.0) |
| 19 | M28 X 1 - 6H | 1.52 (38.5) | 11 | 17 | 1-28 UN | 1.52 (38.5) | 8 | 1.93 (49.0) | 2.74 (69.6) | 2.13 (54.1) | 1.64 (41.7) | .64 (16.3) |
| 21 | M31 X 1 - 6H | 1.64 (41.7) | 16 | 19 | 1-1/8-28 UN | 1.64 (41.7) | 11 | 2.00 (50.8) | 2.94 (74.7) | 2.19 (55.6) | 1.89 (48.0) | .77 (19.6) |
| 23 | M34 X 1 - 6H | 1.77 (44.9) | 21 | 21 | 1-1/4-28 UN | 1.77 (44.9) | 16 | 2.08 (52.8) | 3.02 (76.7) | 2.25 (57.2) | 1.89 (48.0) | .84 (21.3) |
| 25 | M37 X 1 - 6H | 1.89 (48.0) | 29 | 23 | 1-3/8-28 UN | 1.89 (48.0) | 21 | 2.14 (54.4) | 3.20 (81.3) | 2.32 (58.9) | 2.16 (54.9) | .84 (21.3) |
| - | - | - | - | 25 | 1-1/2-28 UN | 2.02 (51.2) | 29 | 2.22 (56.4) | 3.28 (83.3) | 2.39 (60.7) | 2.16 (54.9) | .89 (22.6) |

*Use Glenair 687-142 seal plug in vacant holes

| Table II: Material and Finish | | |
|---|---|---|
| Code | Material | Finish Description |
| XB | Composite | No Plating - Black Color |
| XO | | No Plating - Amber Color |
| XM | | Electroless Nickel |
| XW | | Cadmium Olive Drab over Electroless Nickel |

Refer to Appendix for material/finish details

© 2012 Glenair, Inc.